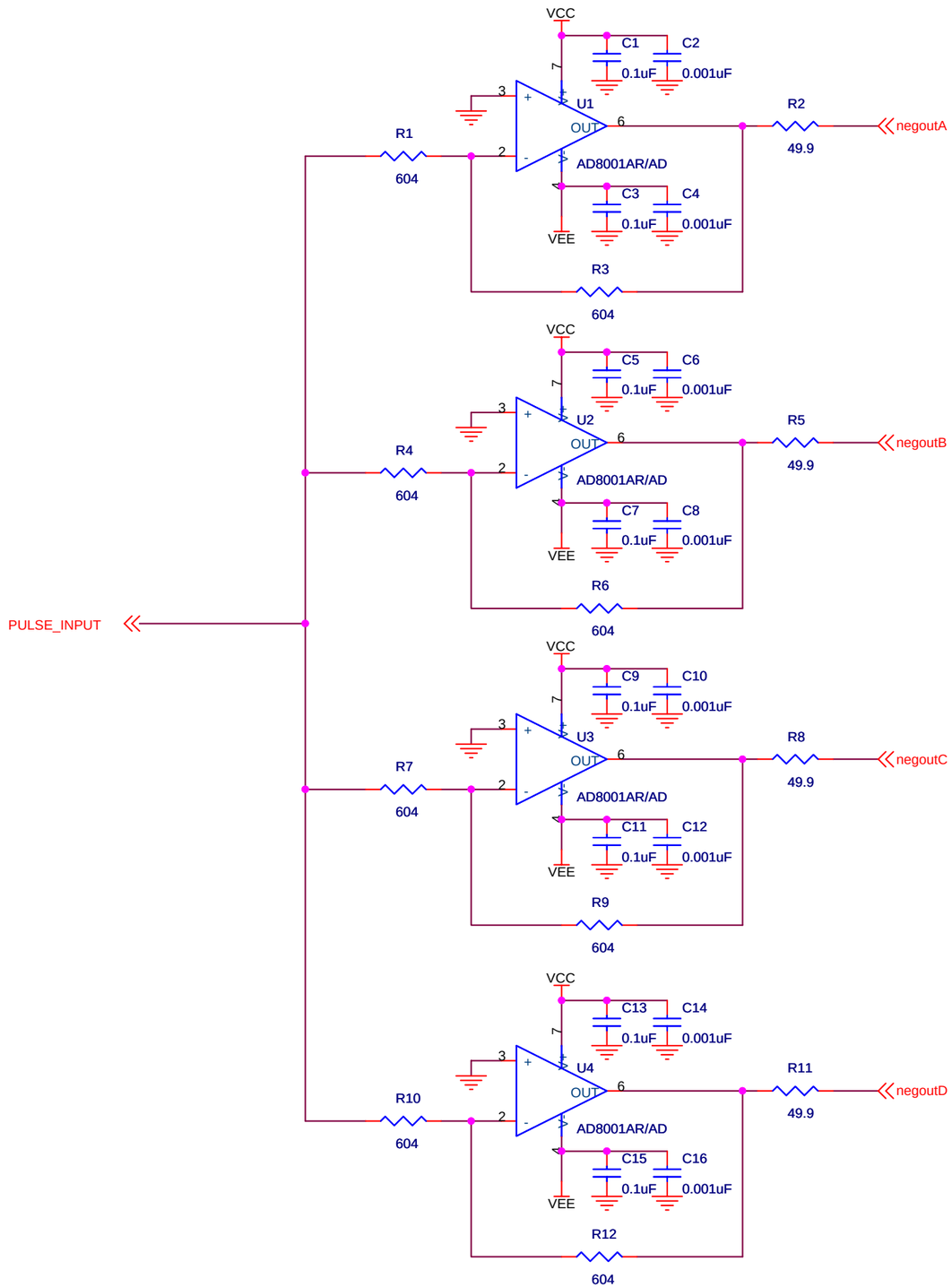

BROOKHAVEN NATIONAL LABORATORY

Instrumentation Division
Anand Kandasamy
535B 20N Technology Street
Upton, NY 11973
anand@bnl.gov

ATLAS CSC ASM1/ASM2 Charge Injection Board

Size	CAGE Code	DWG NO	Rev
B		IO-1174-1	

Monday, December 15, 2003

Scale

Sheet 1 of 7

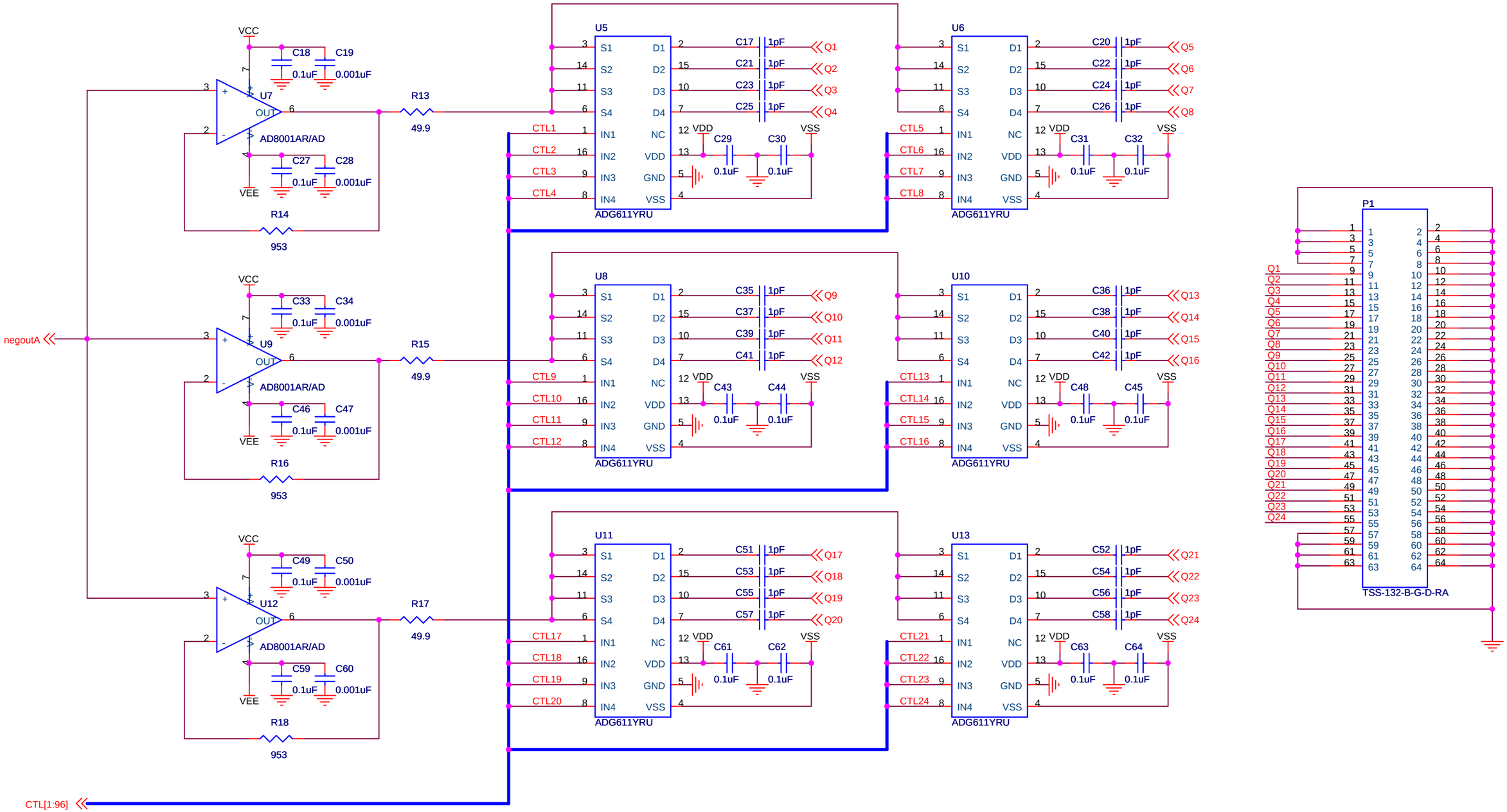

BROOKHAVEN NATIONAL LABORATORY

Instrumentation Division
Anand Kandasamy
535B 20N Technology Street
Upton, NY 11973
anand@bnl.gov

ATLAS CSC ASM1/ASM2 Charge Injection Board

Size	CAGE Code	DWG NO	Rev
B		IO-1174-1	

Monday, December 15, 2003

Scale

Sheet 2 of 7

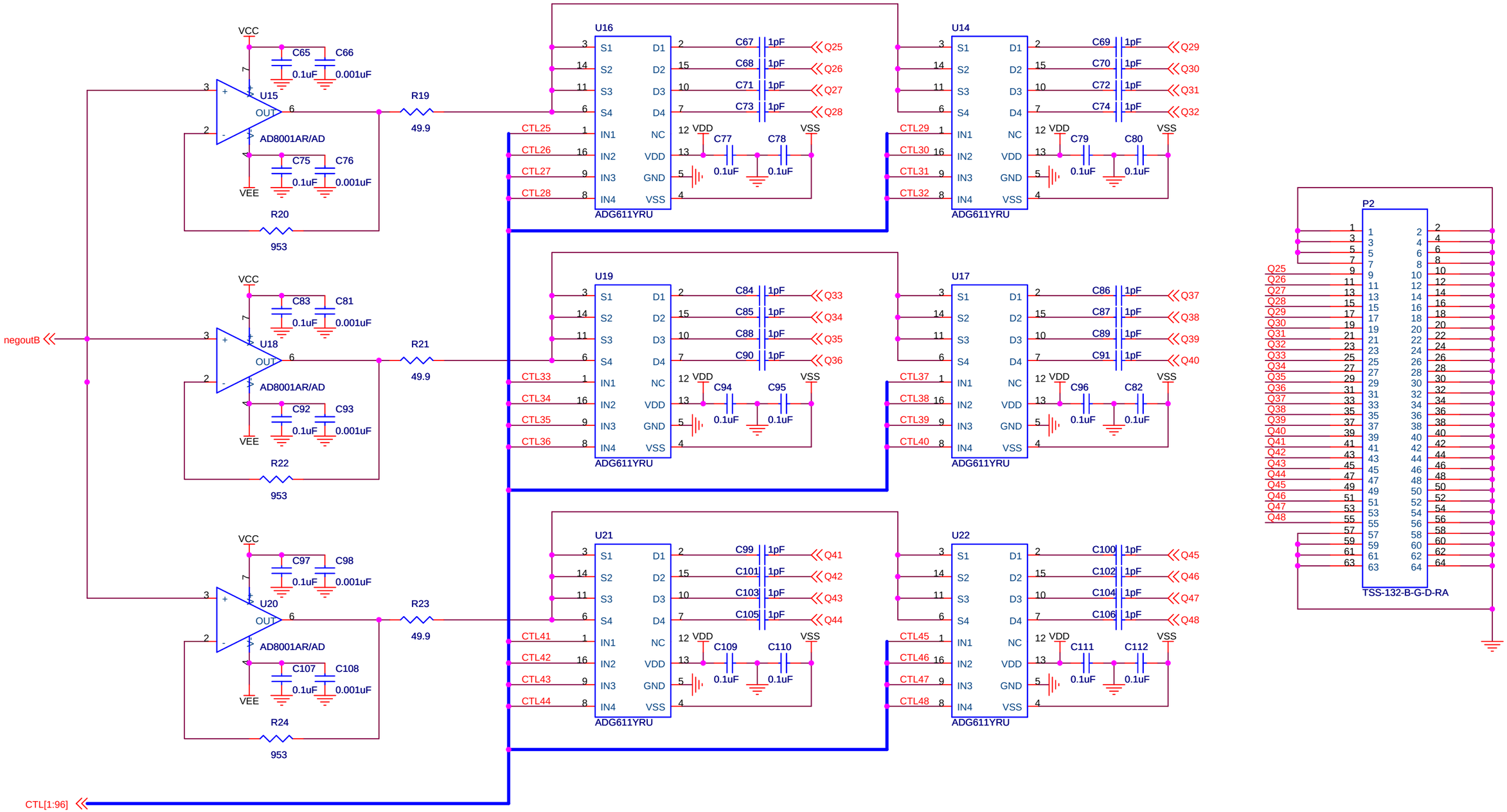

BROOKHAVEN NATIONAL LABORATORY

Instrumentation Division
Anand Kandasamy
535B 20N Technology Street
Upton, NY 11973
anand@bnl.gov

ATLAS CSC ASM1/ASM2 Charge Injection Board

Size	CAGE Code	DWG NO	Rev
B		IO-1174-1	

Monday, December 15, 2003

Scale

Sheet 3 of 7

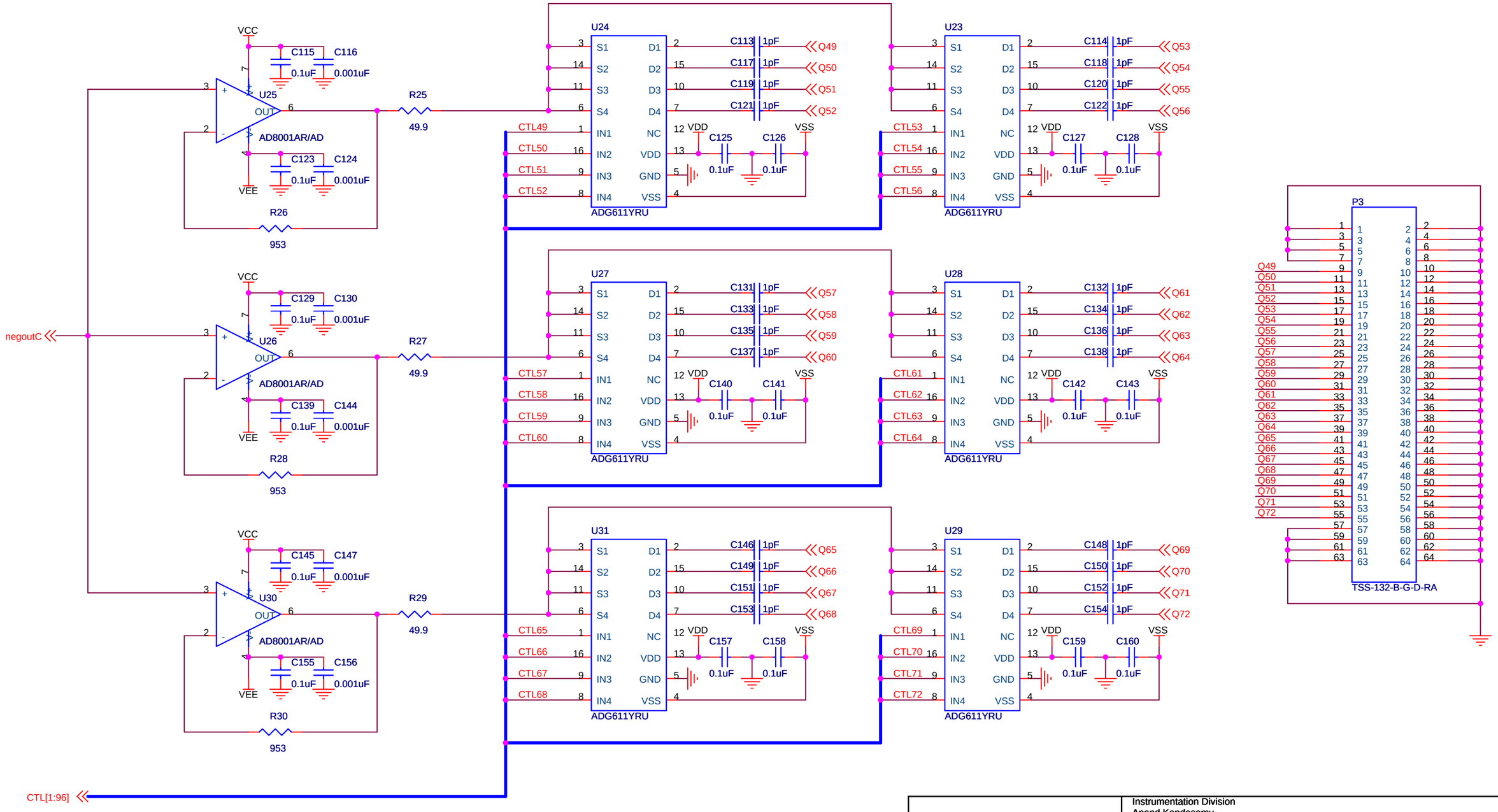

BROOKHAVEN NATIONAL LABORATORY

Instrumentation Division
Anand Kandasamy
535B 20N Technology Street
Upton, NY 11973
anand@bnl.gov

ATLAS CSC ASM1/ASM2 Charge Injection Board

Size	CAGE Code	DWG NO	Rev
B		IO-1174-1	

Monday, December 15, 2003

Scale

Sheet 4 of 7

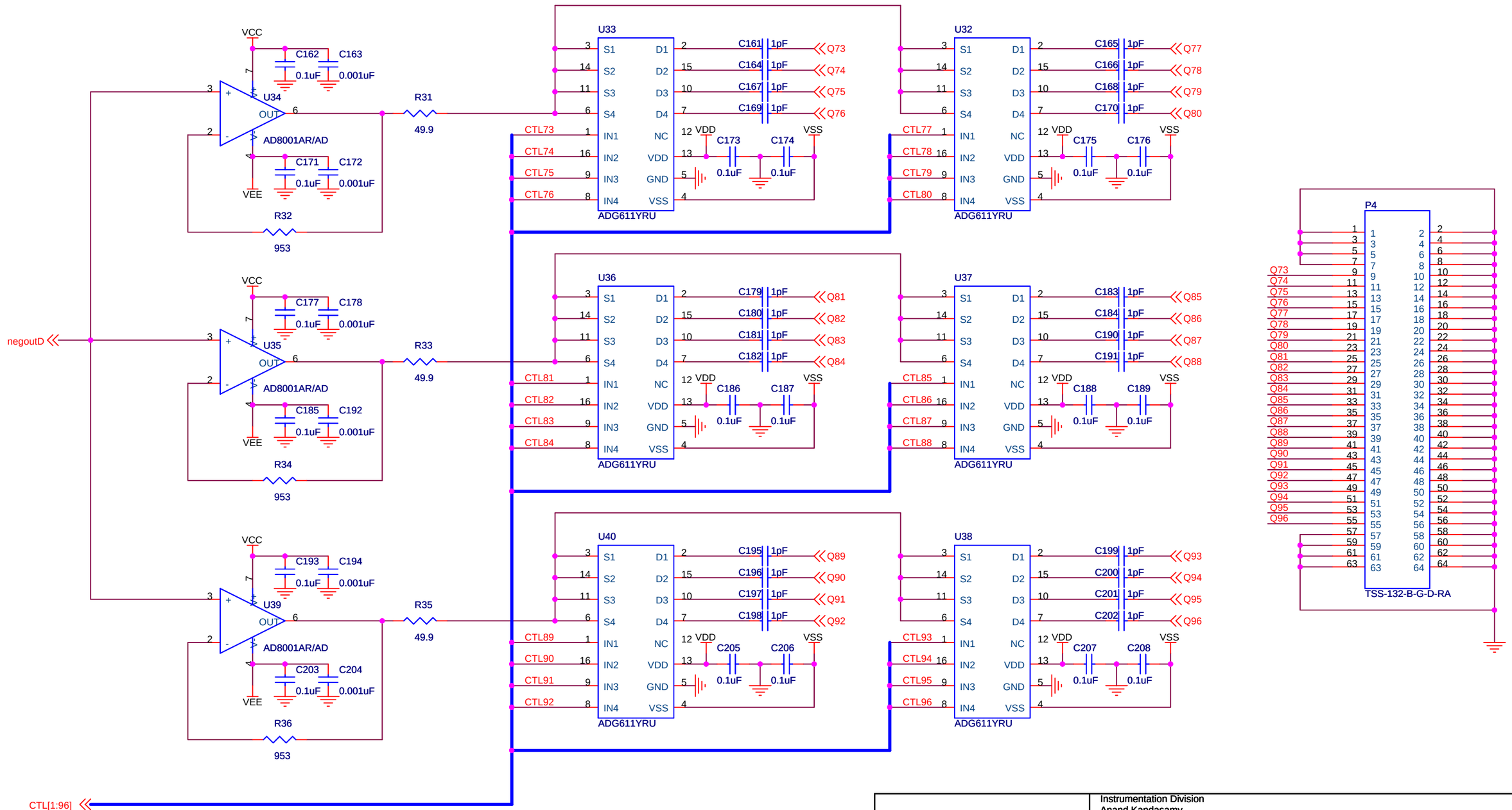

BROOKHAVEN NATIONAL LABORATORY	Instrumentation Division Anand Kandasamy 535B 20N Technology Street Upton, NY 11973 anand@bnl.gov		
	ATLAS CSC ASM1/ASM2 Charge Injection Board		
	Size: B	CAGE Code	DWG NO: IO-1174-1 — Rev
Monday, December 15, 2003	Scale		Sheet 5 of 7

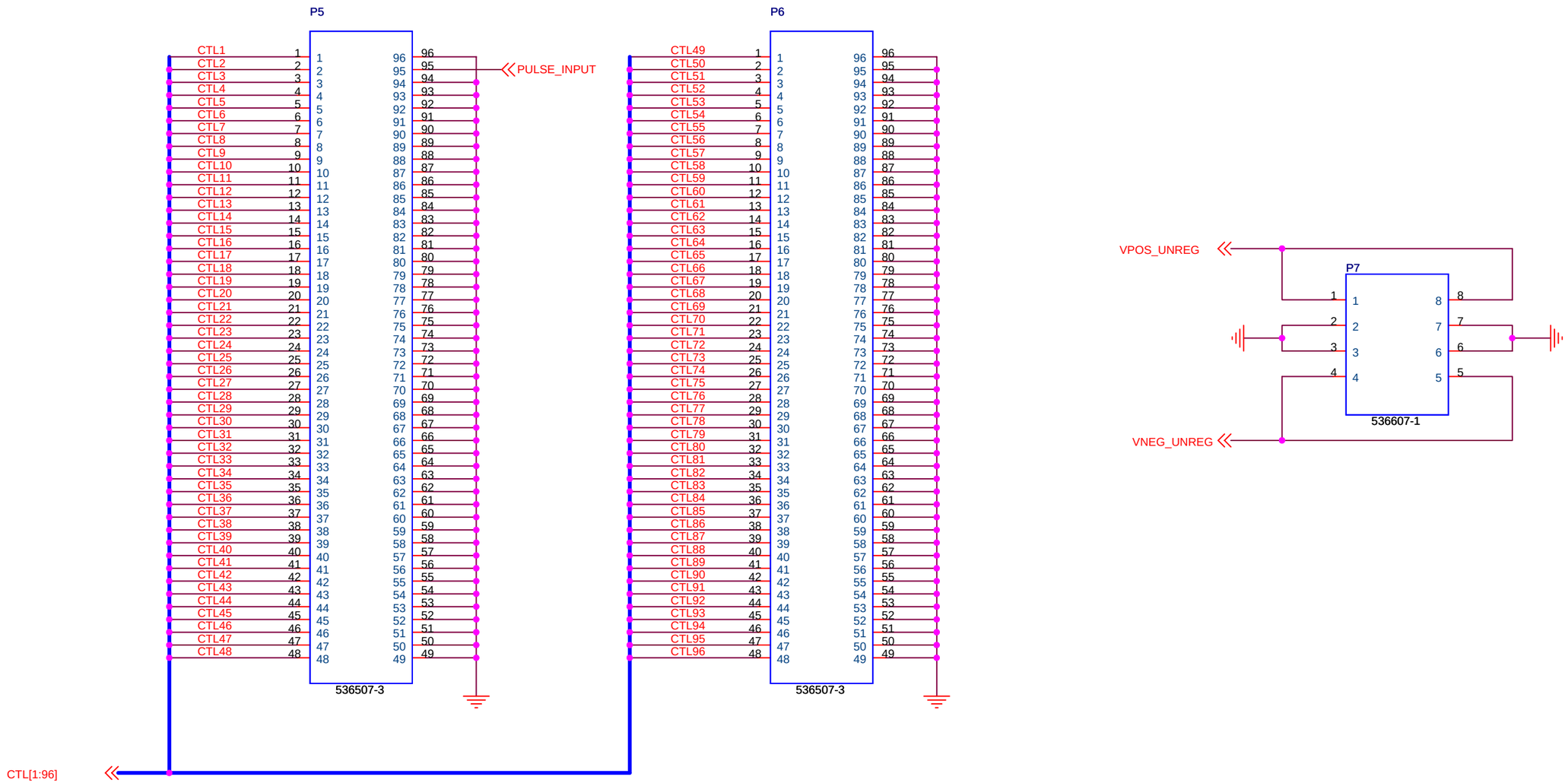

BROOKHAVEN NATIONAL LABORATORY

Instrumentation Division
Anand Kandasamy
535B 20N Technology Street
Upton, NY 11973
anand@bnl.gov

ATLAS CSC ASM1/ASM2 Charge Injection Board

Size	CAGE Code	DWG NO	Rev
B		IO-1174-1	

Monday, December 15, 2003

Scale

Sheet 6 of 7

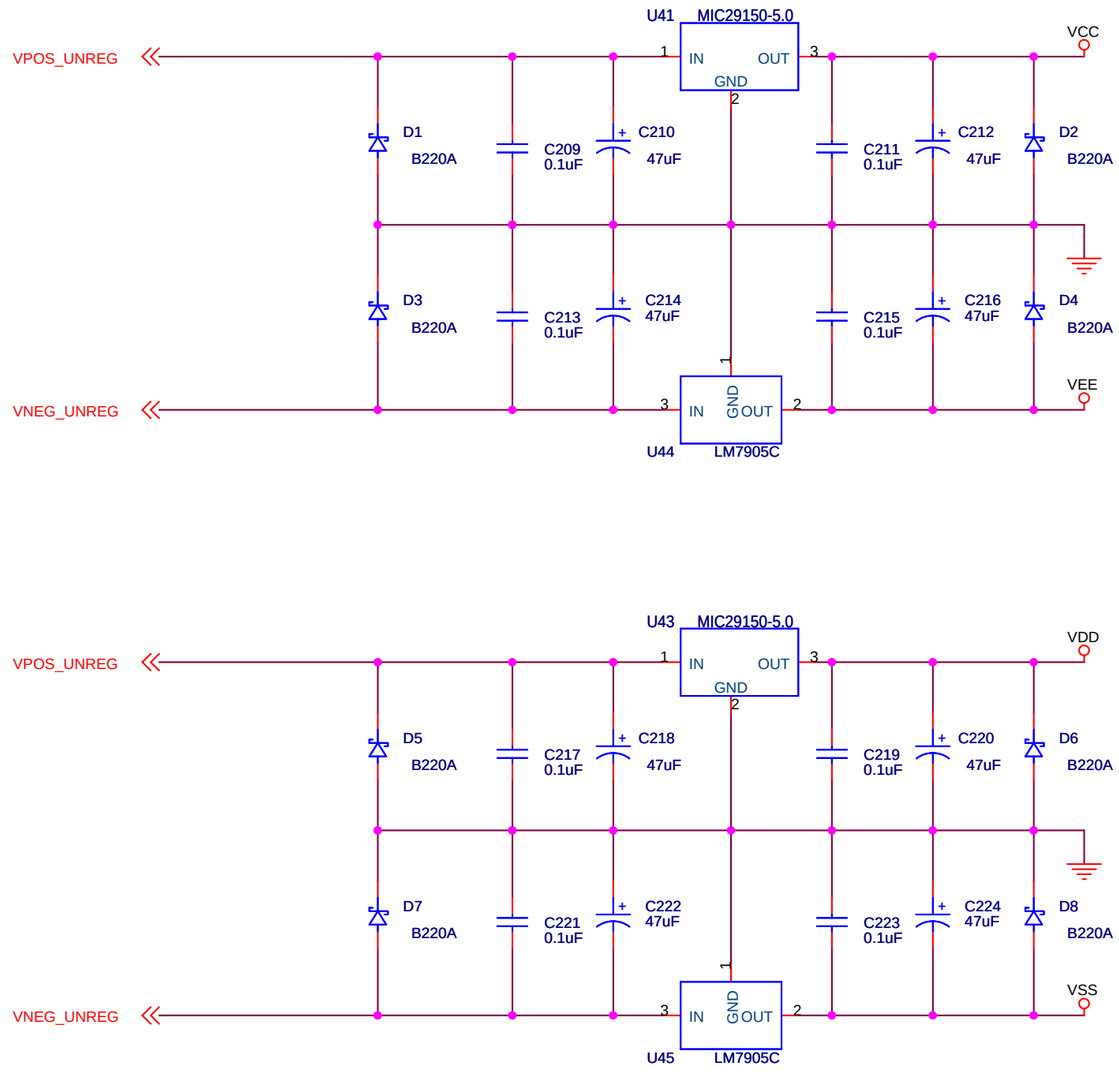

BROOKHAVEN NATIONAL LABORATORY

Instrumentation Division
Anand Kandasamy
535B 20N Technology Street
Upton, NY 11973
anand@bnl.gov

ATLAS CSC ASM1/ASM2 Charge Injection Board

Size	CAGE Code	DWG NO	Rev
B		IO-1174-1	

Monday, December 15, 2003

Scale

Sheet 7 of 7

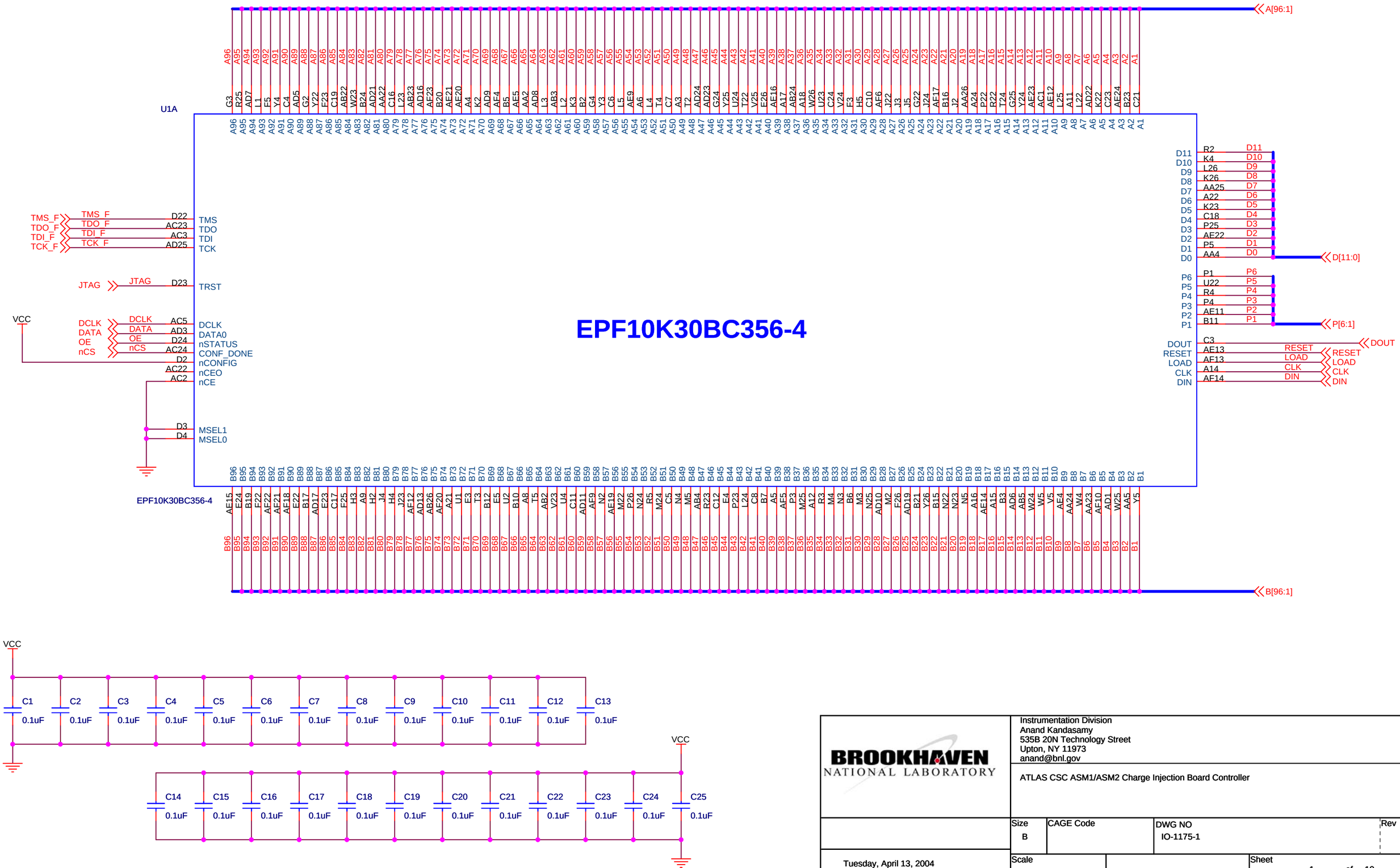

EPF10K30BC356-4

BROOKHAVEN NATIONAL LABORATORY

Instrumentation Division
Anand Kandasamy
535B 20N Technology Street
Upton, NY 11973
anand@bnl.gov

ATLAS CSC ASM1/ASM2 Charge Injection Board Controller

Size	CAGE Code	DWG NO	Rev
B		IO-1175-1	

Tuesday, April 13, 2004

Scale

Sheet 1 of 10

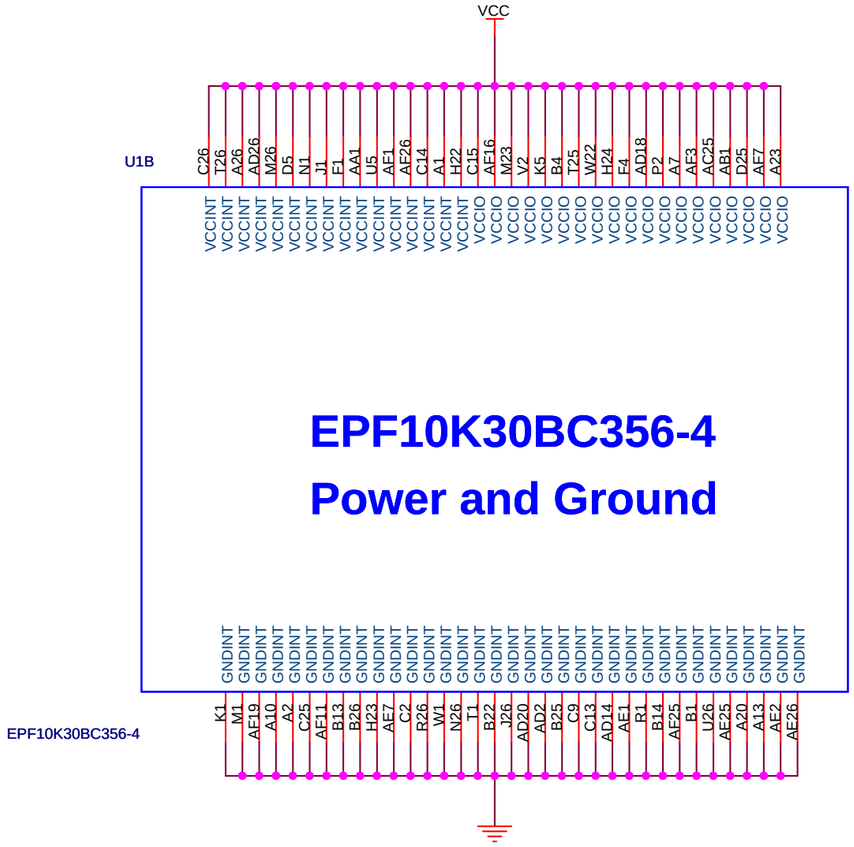

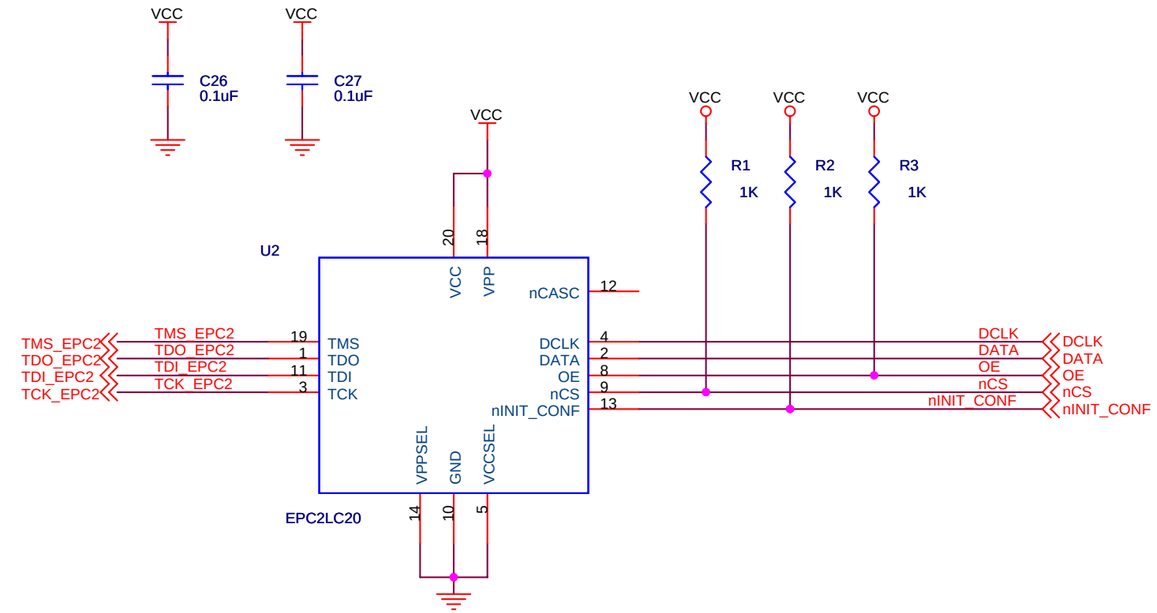

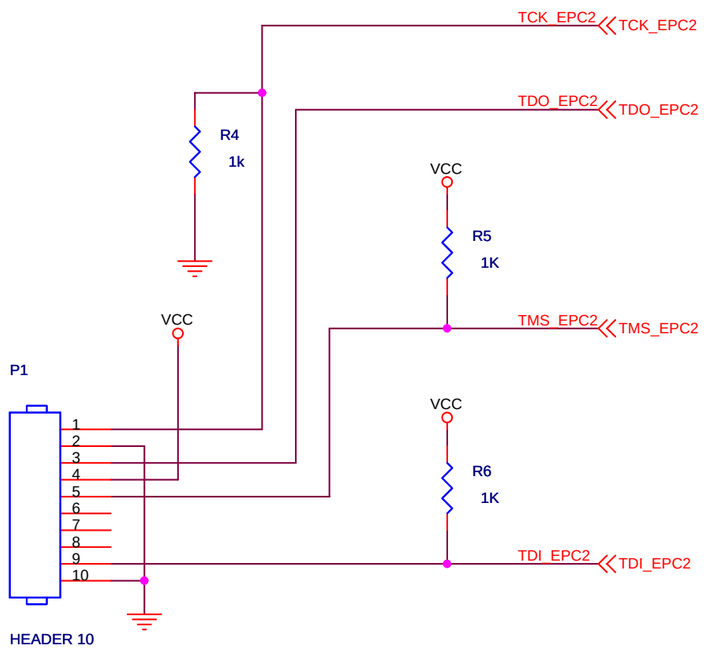

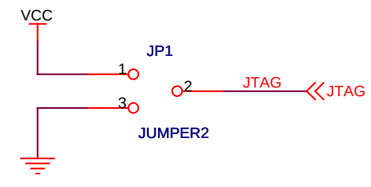

BROOKHAVEN NATIONAL LABORATORY

Instrumentation Division
Anand Kandasamy
535B 20N Technology Street
Upton, NY 11973
anand@bnl.gov

ATLAS CSC ASM1/ASM2 Charge Injection Board Controller

Size	CAGE Code	DWG NO	Rev
B	<Cage Code>	IO-1175-1	<RevCode>

Tuesday, April 13, 2004

Scale

Sheet 2 of 10

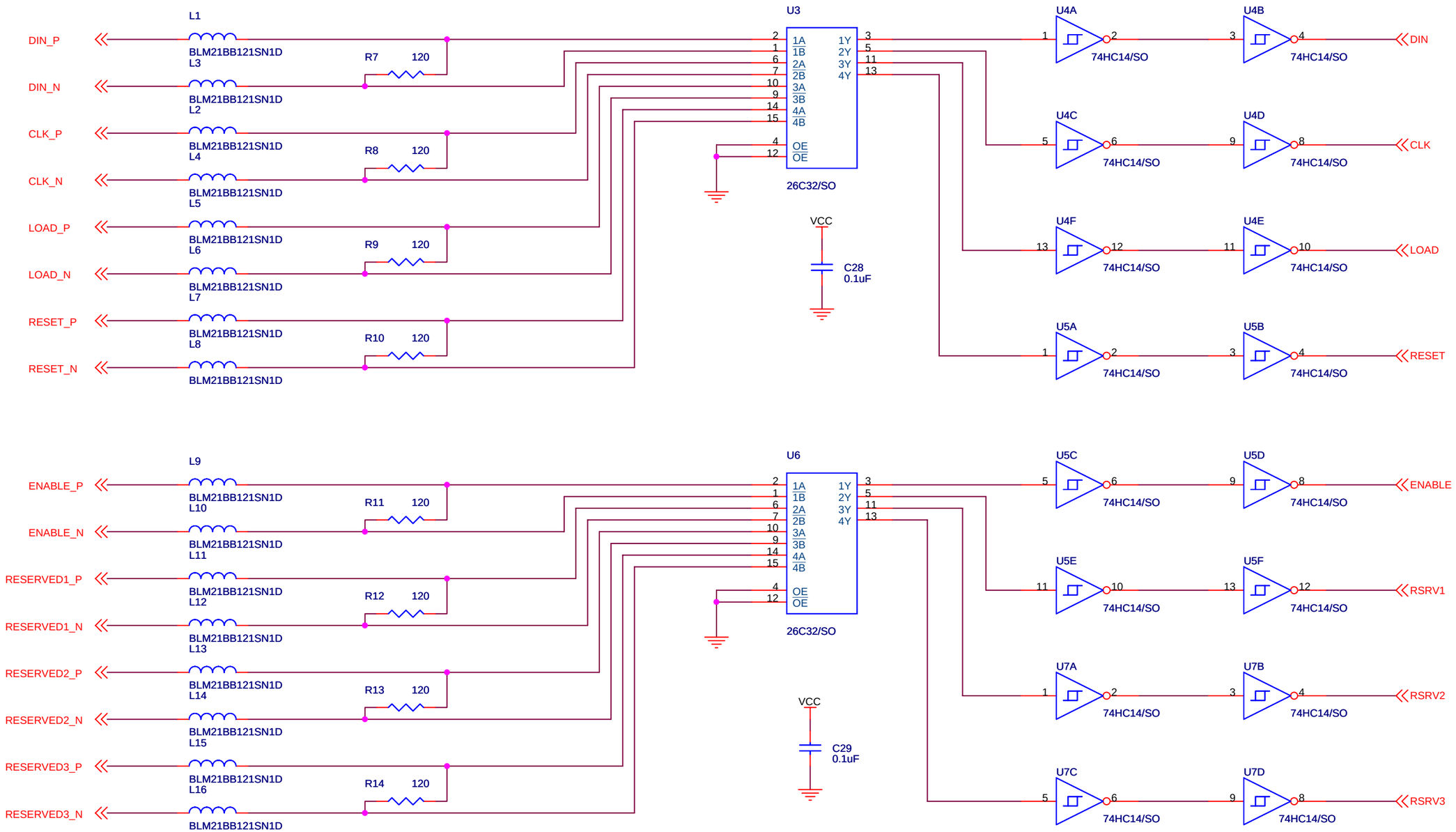

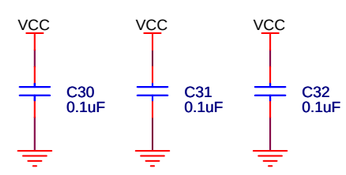

BROOKHAVEN NATIONAL LABORATORY

Instrumentation Division
Anand Kandasamy
535B 20N Technology Street
Upton, NY 11973
anand@bnl.gov

ATLAS CSC ASM1/ASM2 Charge Injection Board Controller

Size	CAGE Code	DWG NO	Rev
B		IO-1175-1	

Monday, April 12, 2004

Scale

Sheet 3 of 10

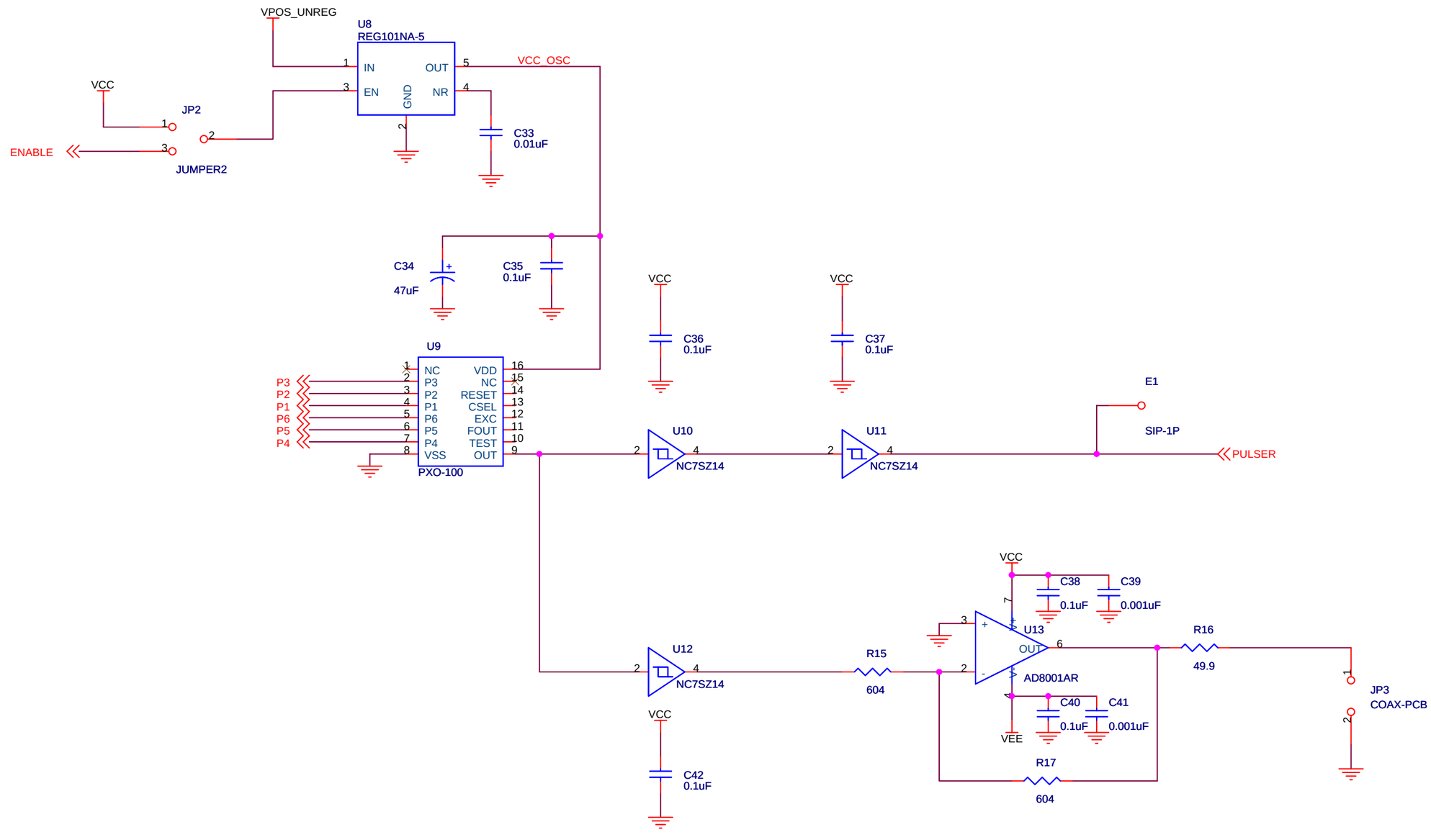

BROOKHAVEN NATIONAL LABORATORY

Instrumentation Division
Anand Kandasamy
535B 20N Technology Street
Upton, NY 11973
anand@bnl.gov

ATLAS CSC ASM1/ASM2 Charge Injection Board Controller

Size	CAGE Code	DWG NO	Rev
B		IO-1175-1	

Friday, May 07, 2004

Scale

Sheet 4 of 10

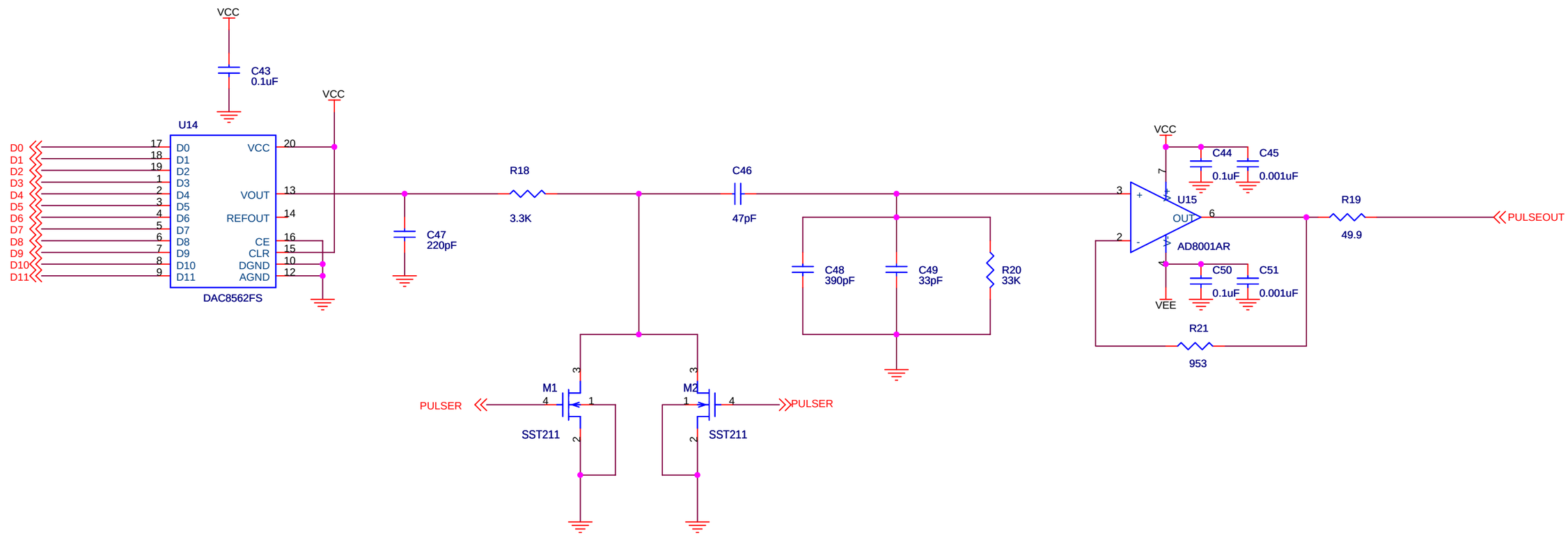

BROOKHAVEN NATIONAL LABORATORY

Instrumentation Division
Anand Kandasamy
535B 20N Technology Street
Upton, NY 11973
anand@bnl.gov

ATLAS CSC ASM1/ASM2 Charge Injection Board Controller

Size	CAGE Code	DWG NO	Rev
B		IO-1175-1	

Tuesday, April 13, 2004

Scale

Sheet 5 of 10

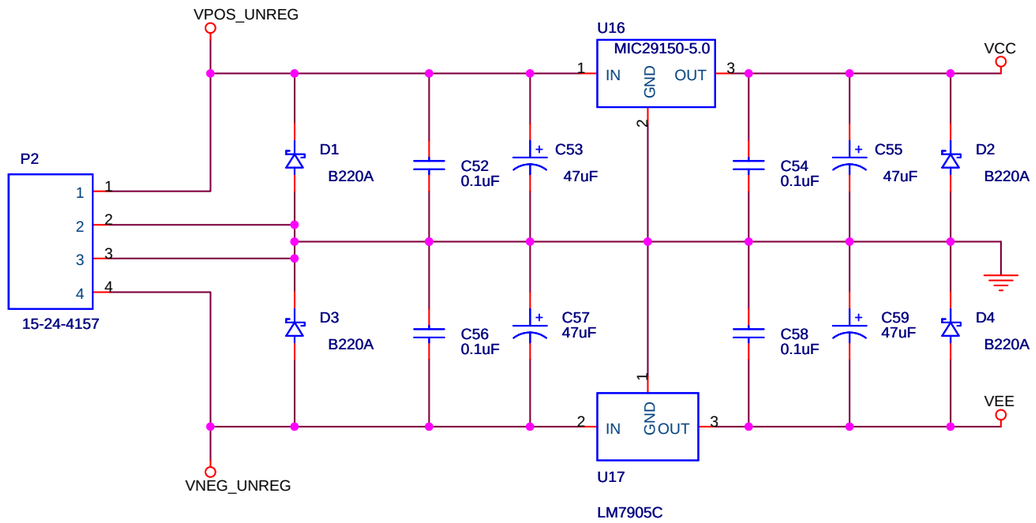

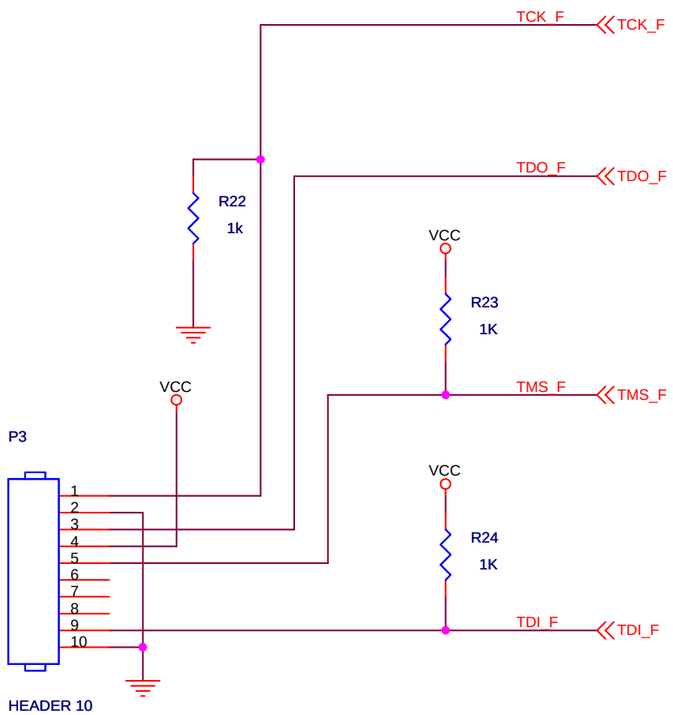

BROOKHAVEN NATIONAL LABORATORY

Instrumentation Division
Anand Kandasamy
535B 20N Technology Street
Upton, NY 11973
anand@bnl.gov

ATLAS CSC ASM1/ASM2 Charge Injection Board Controller

Size	CAGE Code	DWG NO	Rev
B		IO-1175-1	

Tuesday, April 13, 2004

Scale

Sheet 6 of 10

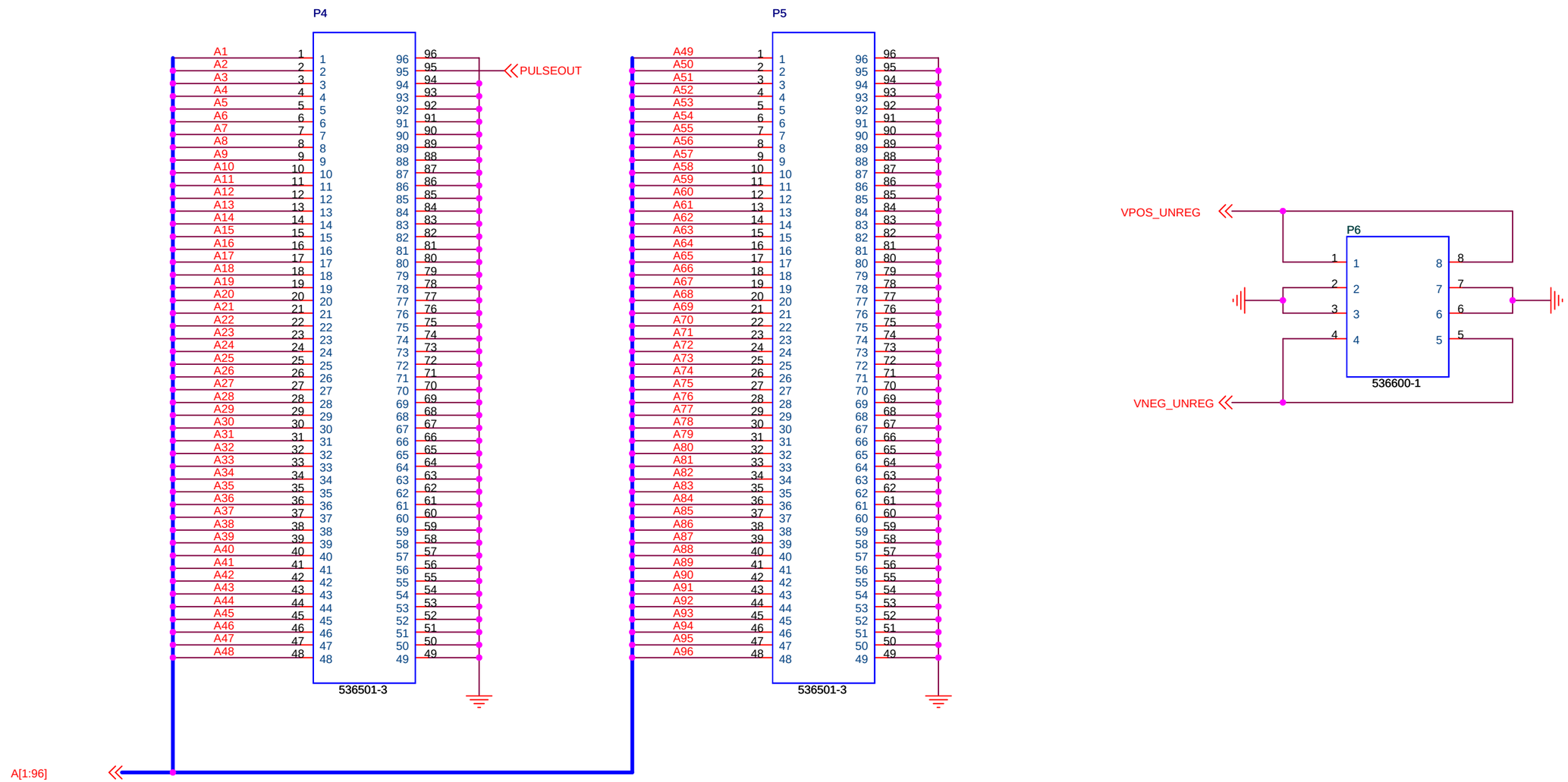

BROOKHAVEN NATIONAL LABORATORY

Instrumentation Division
Anand Kandasamy
535B 20N Technology Street
Upton, NY 11973
anand@bnl.gov

ATLAS CSC ASM1/ASM2 Charge Injection Board Controller

Size	CAGE Code	DWG NO	Rev
B		IO-1175-1	

Monday, April 12, 2004

Scale

Sheet 7 of 10

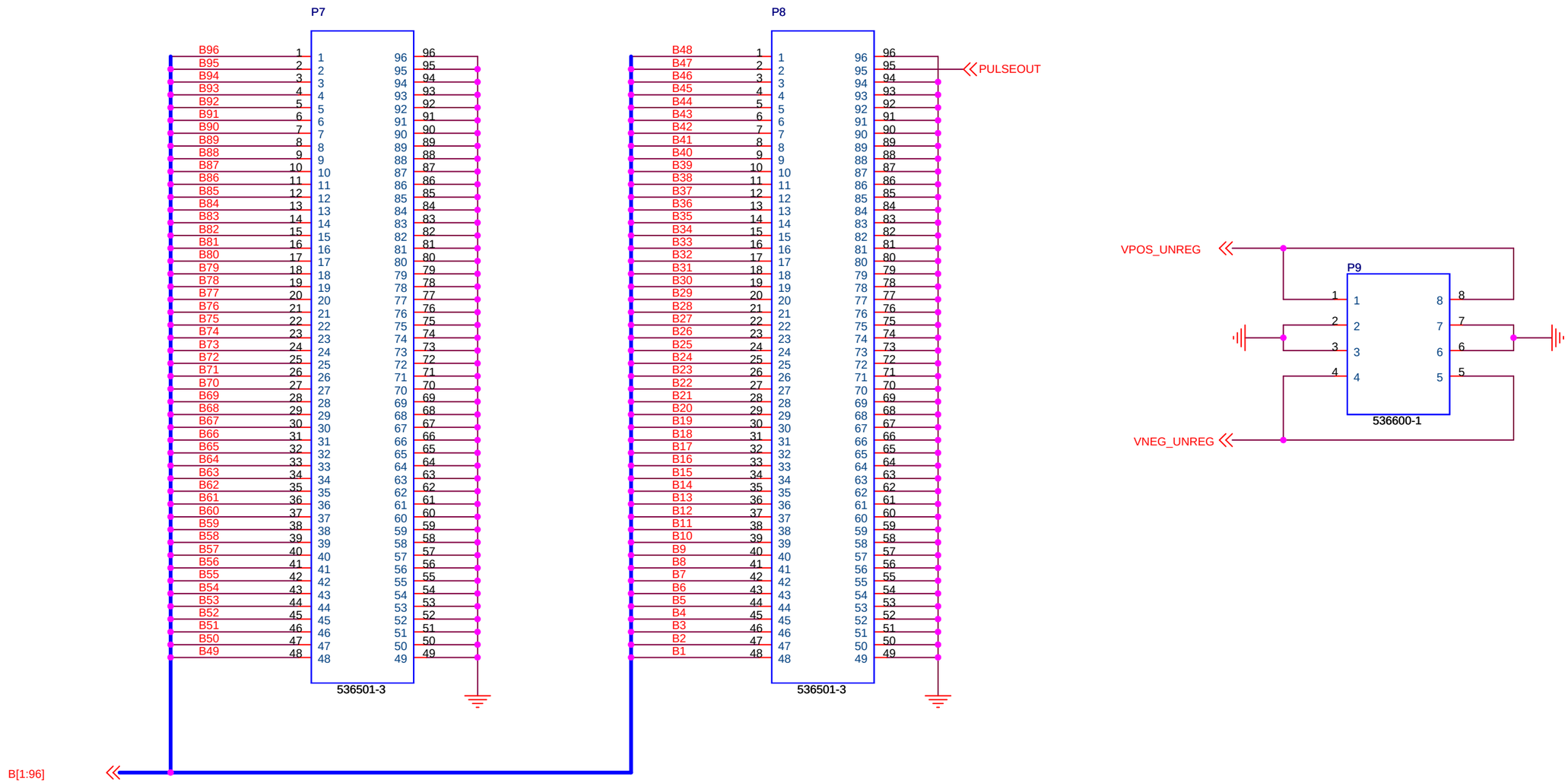

BROOKHAVEN NATIONAL LABORATORY

Instrumentation Division
Anand Kandasamy
535B 20N Technology Street
Upton, NY 11973
anand@bnl.gov

ATLAS CSC ASM1/ASM2 Charge Injection Board Controller

Size	CAGE Code	DWG NO	Rev
B		IO-1175-1	

Monday, April 12, 2004

Scale

Sheet 8 of 10

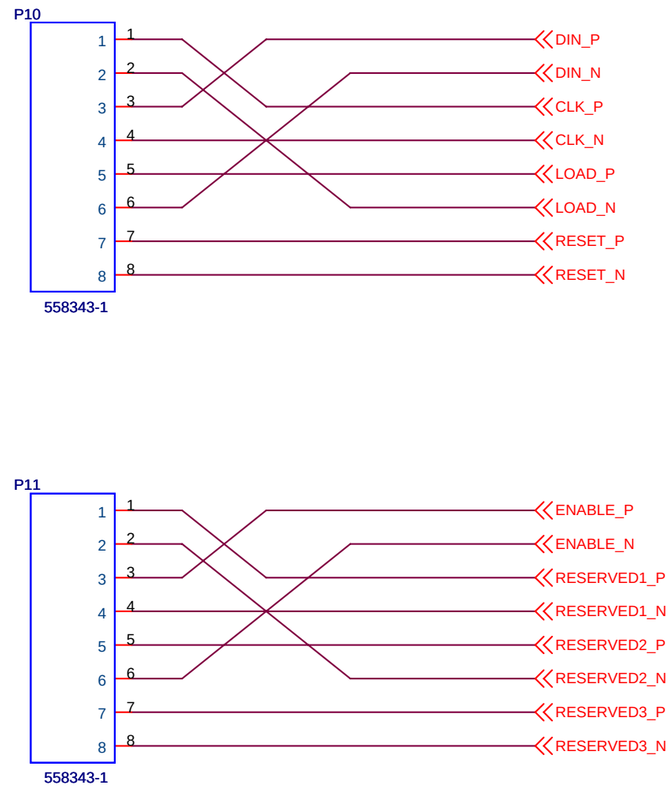

BROOKHAVEN NATIONAL LABORATORY

Instrumentation Division
Anand Kandasamy
535B 20N Technology Street
Upton, NY 11973
anand@bnl.gov

ATLAS CSC ASM1/ASM2 Charge Injection Board Controller

Size	CAGE Code	DWG NO	Rev
B		IO-1175-1	

Friday, May 07, 2004

Scale

Sheet 9 of 10

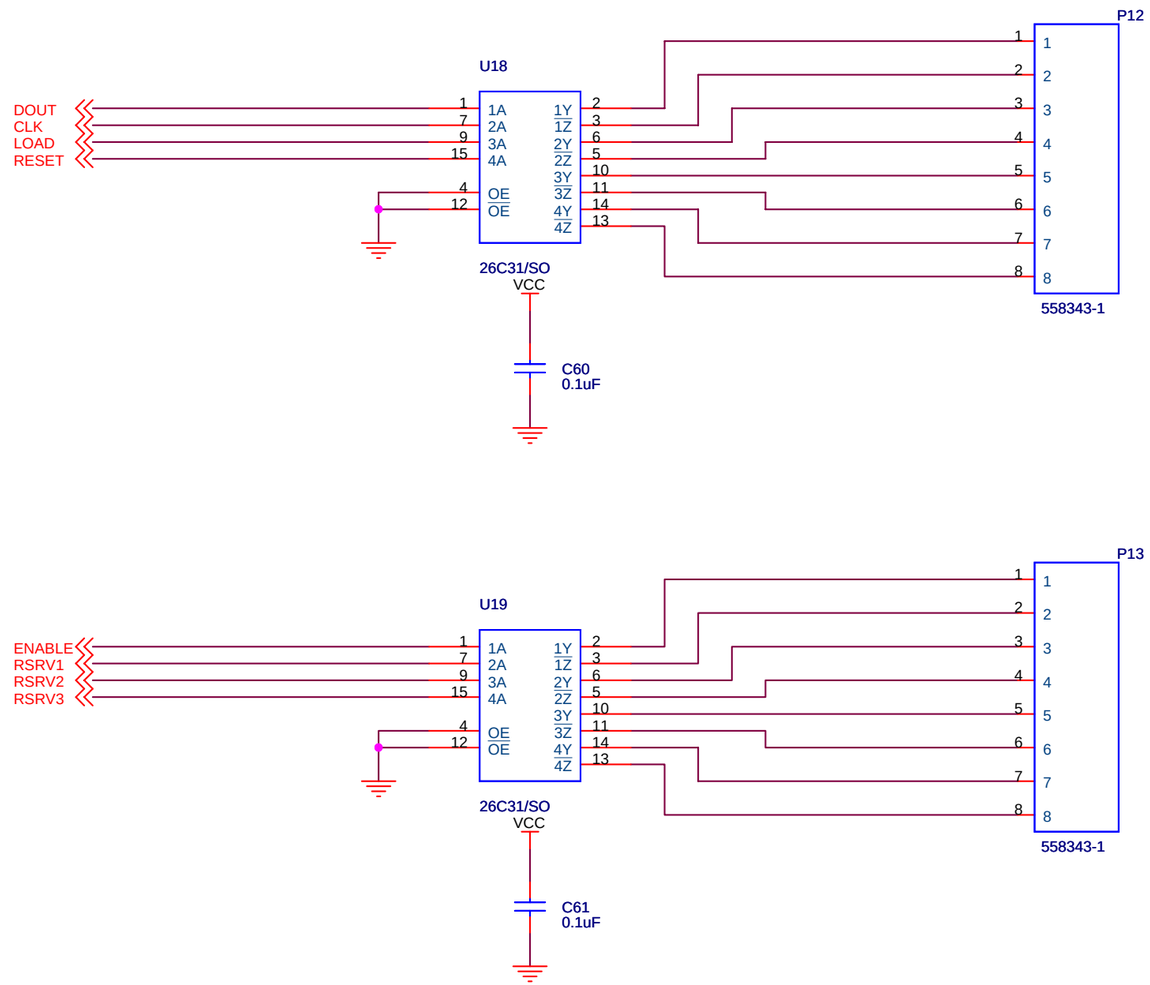

Instrumentation Division
Anand Kandasamy
535B 20N Technology Street
Upton, NY 11973
anand@bnl.gov

RS422 Driver Board 8 Channels/ PC Controller

Size	CAGE Code	DWG NO	Rev
B	<Cage Code>	IO-1176-1	<RevCode>

Monday, April 12, 2004

Scale

Sheet 10 of 10

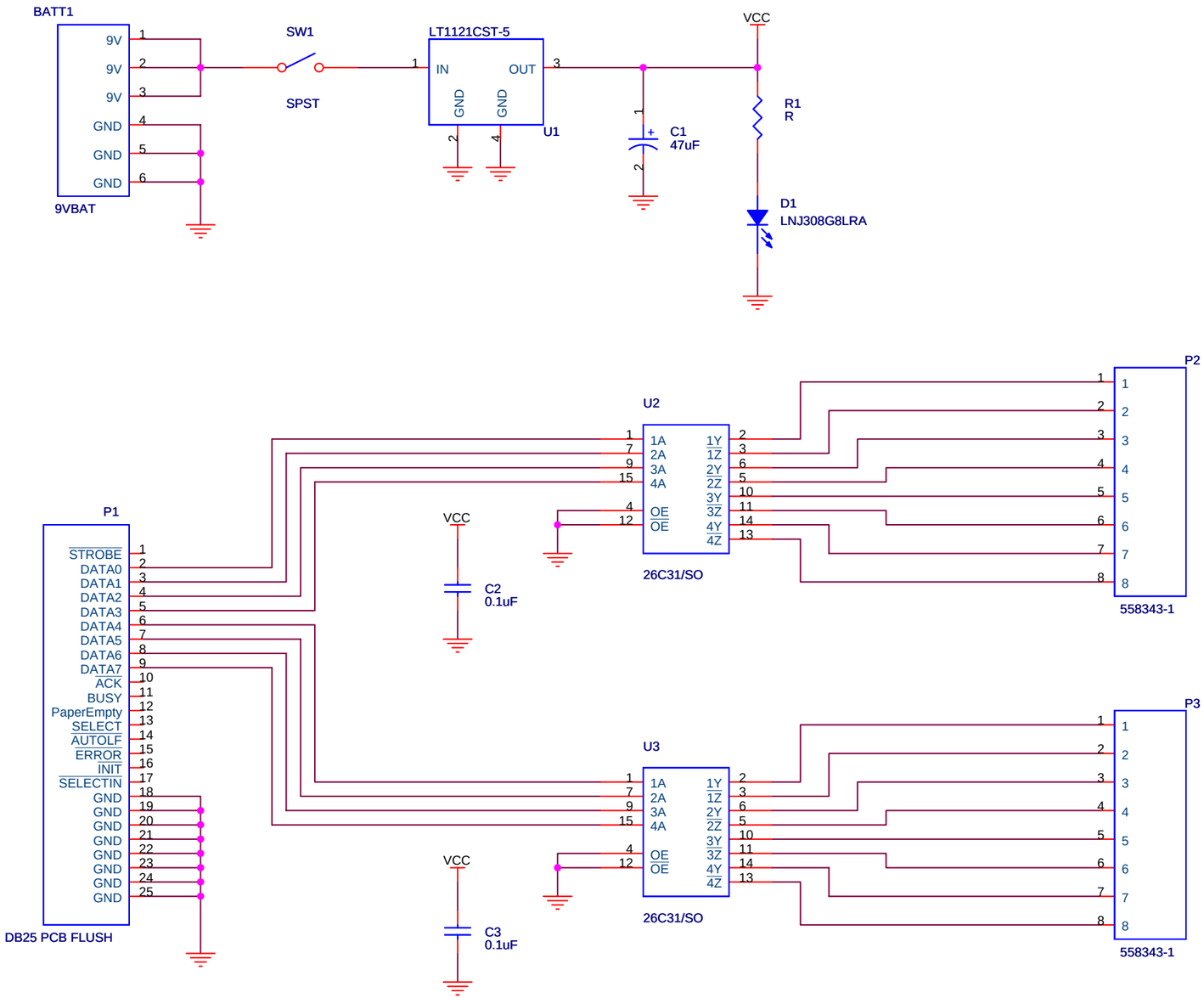

BROOKHAVEN NATIONAL LABORATORY

Instrumentation Division
Anand Kandasamy
535B 20N Technology Street
Upton, NY 11973
anand@bnl.gov

RS-422 8-Channel Driver Board

Size	CAGE Code	DWG NO	Rev
B		IO-1176-1	

Tuesday, December 16, 2003

Scale

Sheet 1 of 1