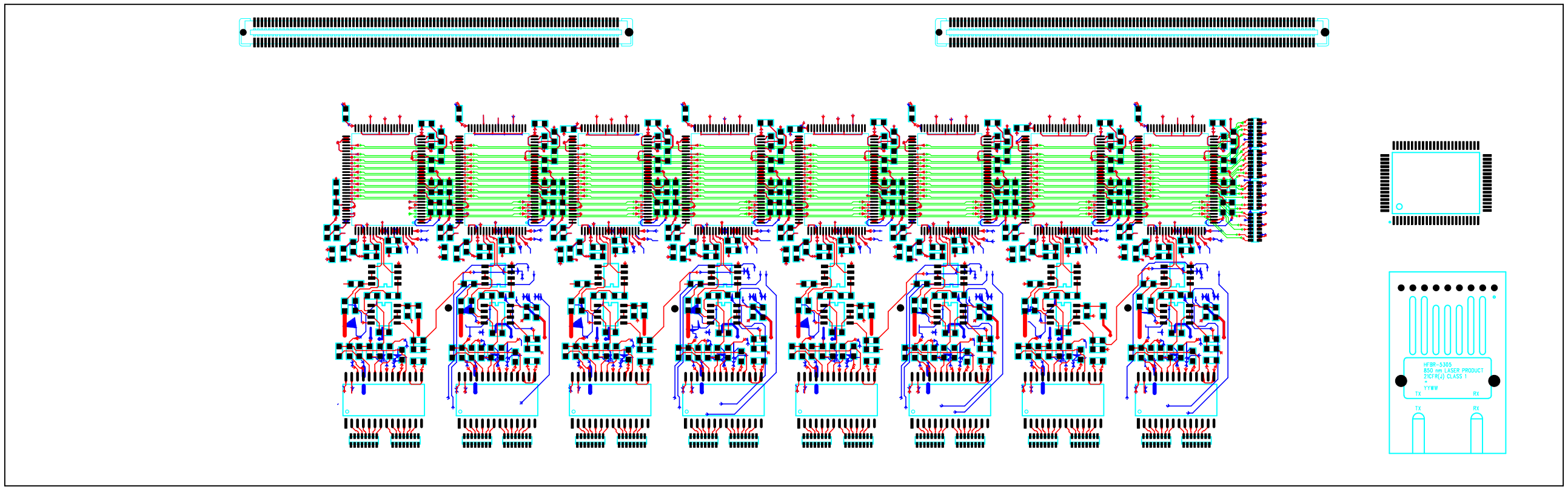
HFBR-5305
850 nm LASER PRODUCT
21CFR(J) CLASS 1
YYWW
TX
RX
TX
RX