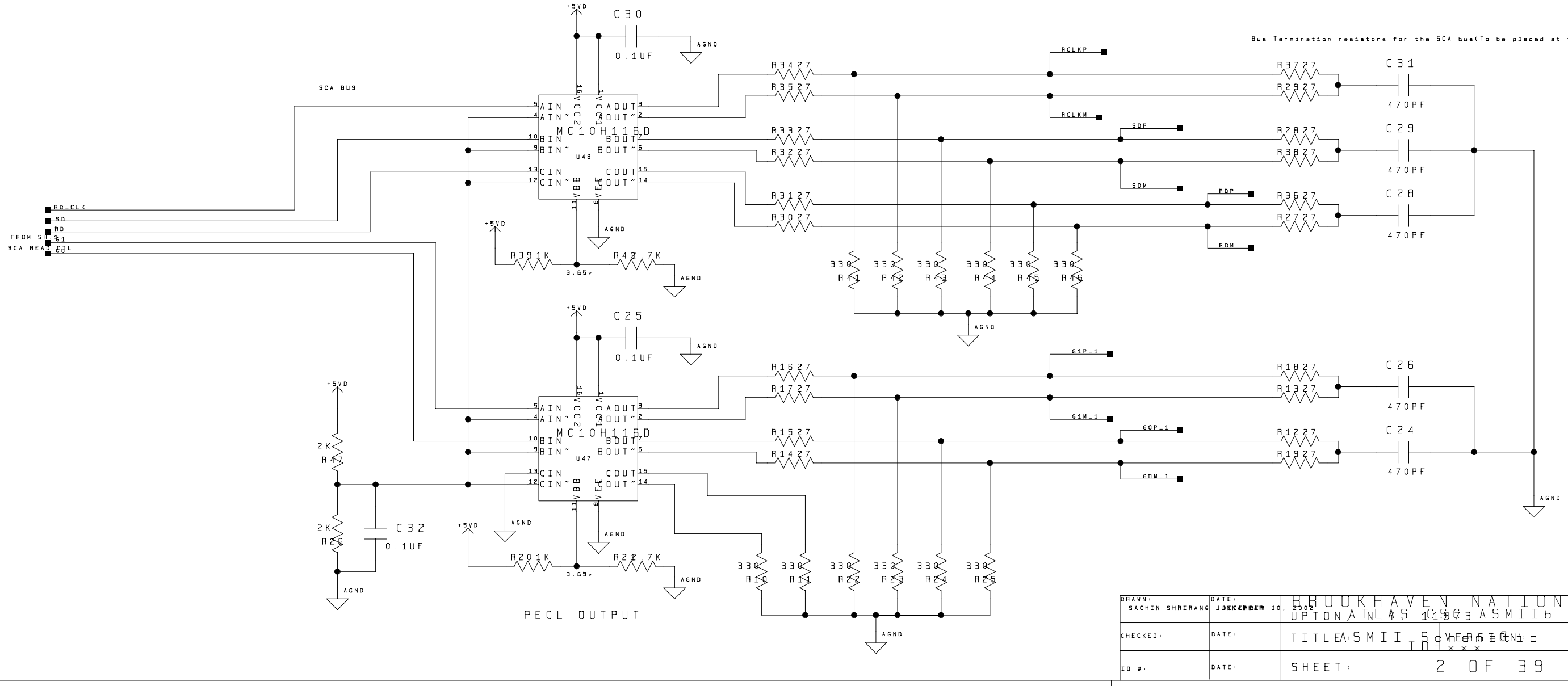
Bus Termination resistors for the SCA bus(To be placed at the end
SCA BUS
FROM SCA REAR
RD_CLK
SD
RD
S1
CTL
+5VD
C30
0.1UF
AGND
MC10H116D
U48
U47
R3427
R3527
R3327
R3227
R3127
R3027
R3727
R2927
R2827
R3827
R3627
R2727
RCLKP
RCLKM
SDP
SDM
RDP
RDM
330
R41
R42
R43
R44
R45
R46
C31
C29
C28
470PF
R391K
R402.7K
3.65v
C25
R1627
R1727
R1527
R1427
R1827
R1327
R1227
R1927
G1P_1
G1M_1
G0P_1
G0M_1
C26
C24
2K
R47
R26
C32
R201K
R212.7K
R10
R11
R22
R23
R24
R25
PECL OUTPUT
DRAWN: SACHIN SHRIRANG JOSHI
DATE: DECEMBER 10, 2002
CHECKED:
ID #:
BROOKHAVEN NATIONAL LABORATORY
UPTON, NY 11973
TITLE: ASMII Schematic
IO-xxx
SHEET: 2 OF 39

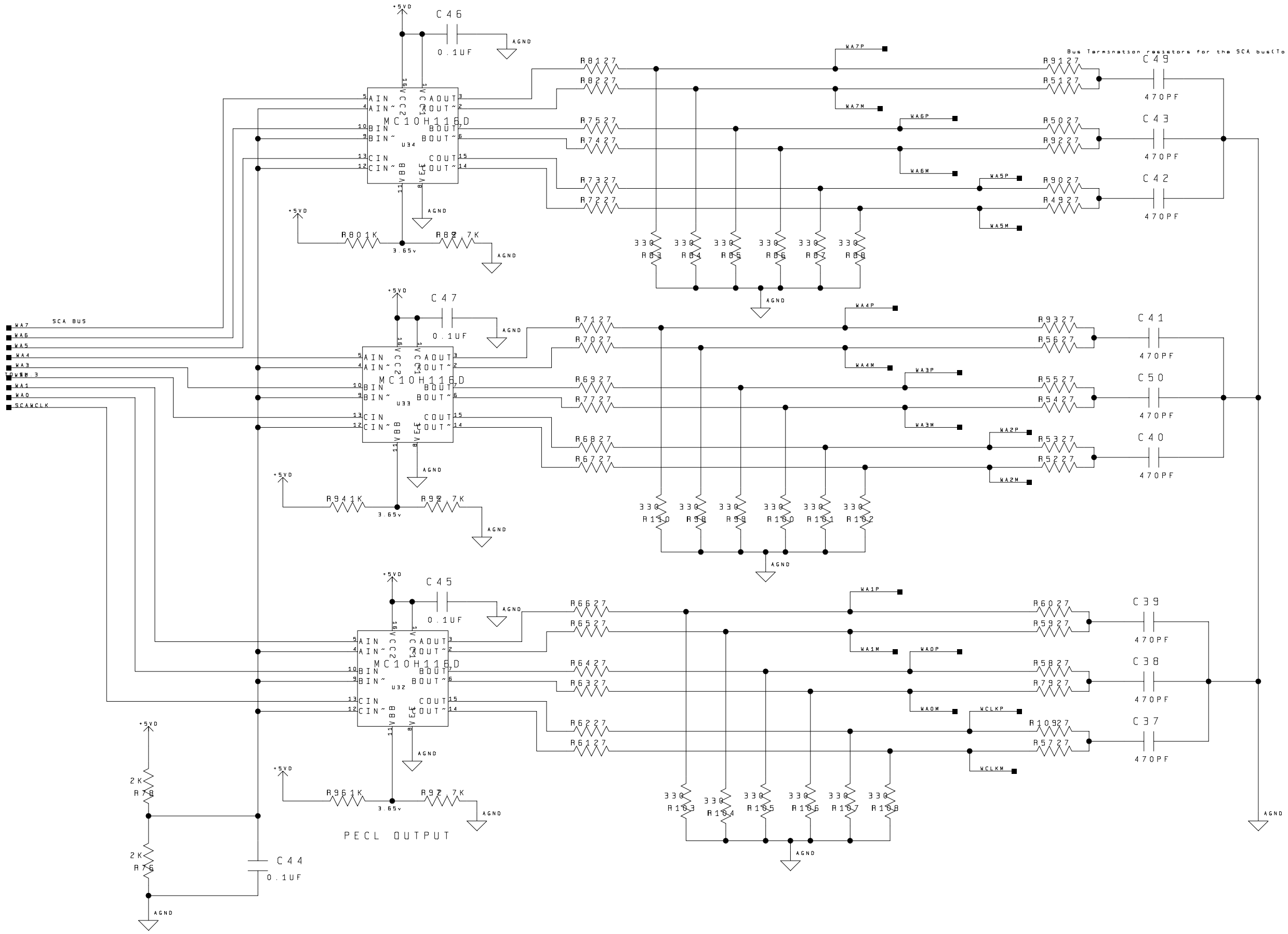

DRAWN: SACHIN SHRIRANG	DATE: DECEMBER 10, 2002	BROOKHAVEN NATIONAL UPTON, N.Y. 11973
CHECKED:	DATE:	TITLE: ASMII Schematic VERSION: IO-xxx
IO #:	DATE:	SHEET: 3 OF 39

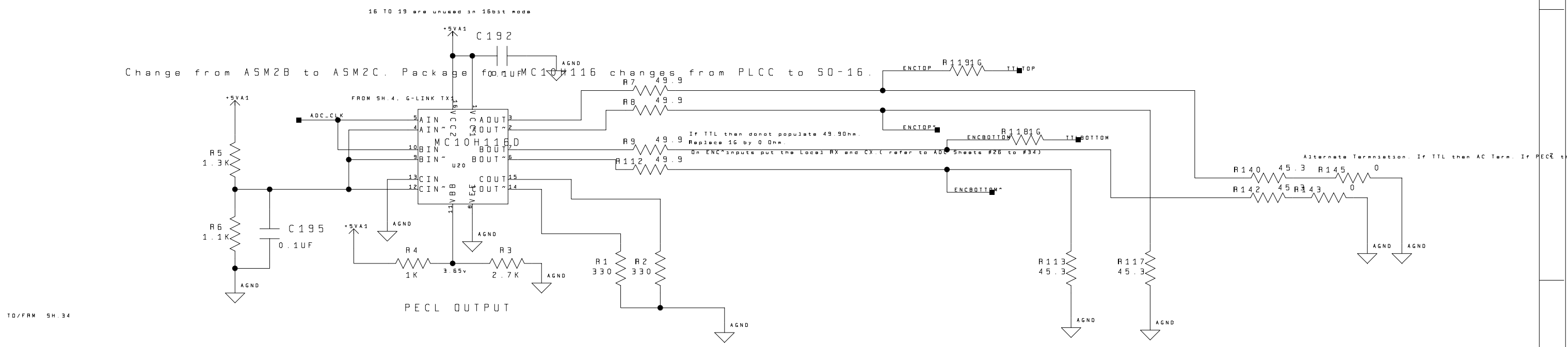

DRAWN: SACHIN SHRIRANG	DATE: DECEMBER 10, 2002	BROOKHAVEN NATIONAL ATLAS CSC ASMII UPTON, N.Y. 11973
CHECKED:	DATE:	TITLE: ASMII Schematic
IO #:	DATE:	SHEET: 4 OF 39

200 pin connectors(Preamps 0-Pin from ASMI)

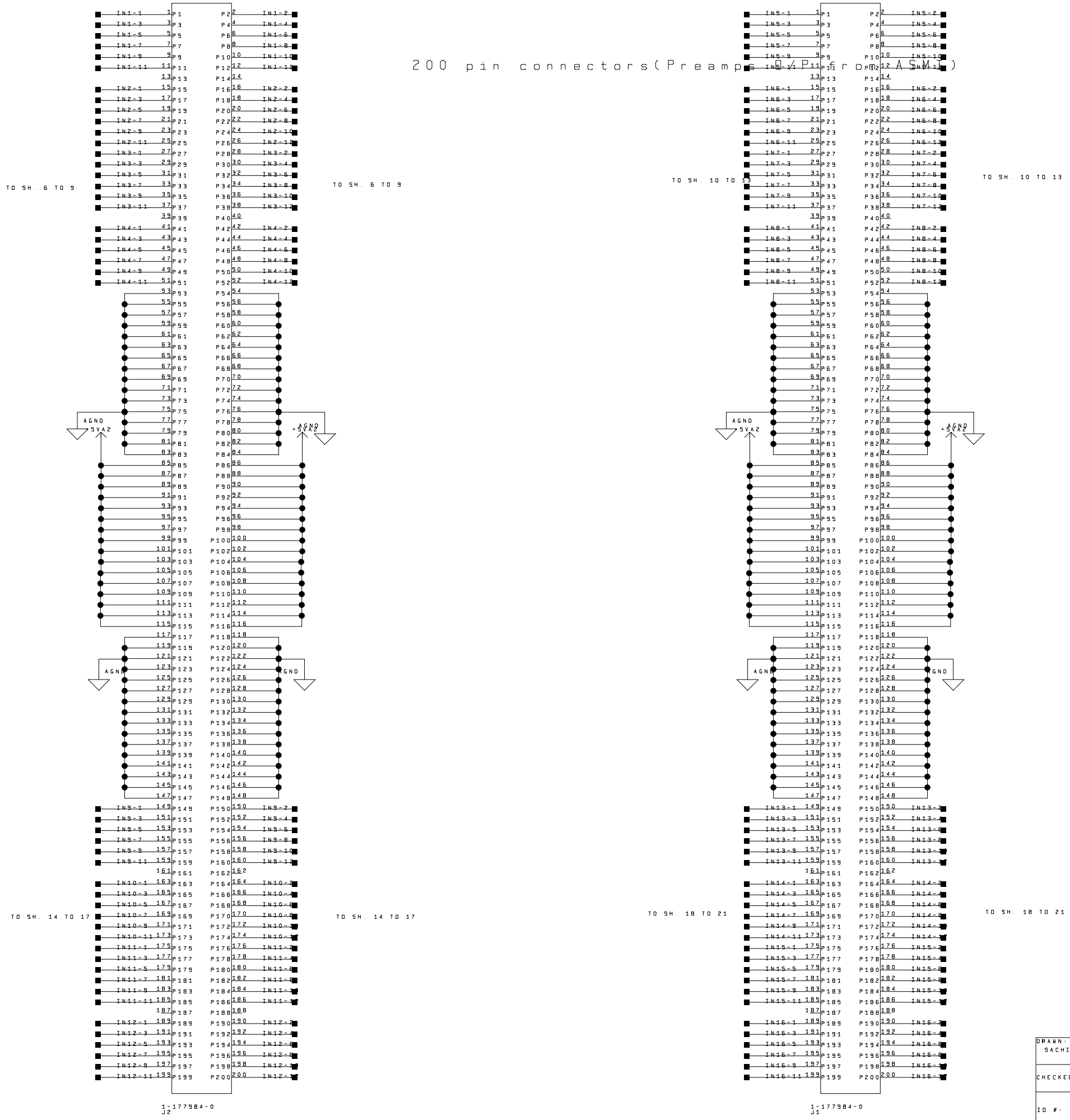

DRAWN: SACHIN SHRIRANG	DATE: DECEMBER 10, 2002	BROOKHAVEN NATIONAL LABORATORY ATLAS CSC ASMII UPTON, N.Y. 11973
CHECKED:	DATE:	TITLE: ASMII Schematic VERSION: I0993
IO #:	DATE:	SHEET: 5 OF 39

SCA

HAMAC STANDARD VERSION

CHANNEL 4 — IN1-4 — 680PF — C84 — 1K R132
CHANNEL 8 — IN1-8 — 680PF — C83 — 1K R131
CHANNEL 12 — IN1-12 — 680PF — C82 — 1K R130
CHANNEL 11 — IN1-11 — 680PF — C81 — 1K R129
CHANNEL 7 — IN1-7 — 680PF — C80 — 1K R128
CHANNEL 3 — IN1-3 — 680PF — C79 — 1K R127
CHANNEL 2 — IN1-2 — 680PF — C78 — 1K R126
CHANNEL 6 — IN1-6 — 680PF — C77 — 1K R125
CHANNEL 10 — IN1-10 — 680PF — C76 — 1K R124
CHANNEL 9 — IN1-9 — 680PF — C75 — 1K R123
CHANNEL 5 — IN1-5 — 680PF — C74 — 1K R122
CHANNEL 1 — IN1-1 — 680PF — C73 — 1K R121

FROM SH.5

+5VD

0.1UF C66
0.1UF C65
0.1UF C64
C58 0.1UF
2.2K R120

+5VA

0.1UF C67
0.1UF C68
0.1UF C69
0.1UF C70
0.1UF C71
0.1UF C72

AGND

MUON

NC2 VDDDLR VDDDRR VDDDW2 VDDDW1 VSSDW2 VDDA2 VDDA1 VDDPW2 VDDD5 VDDDL2 VDDDL3

MUON
IN4L IN4S IN4M IN4H GND1 IN3H IN3M IN3S IN3L GND2 IN2L IN2S IN2M IN2H GND3 IN1H IN1M IN1S IN1L

REF4
REF3
REF2
REF1

AGND

WCLKP WCLKM
WA0P WA0M WA1P WA1M WA2P WA2M WA3P WA3M WA4P WA4M WA5P WA5M WA6P WA6M WA7P WA7M

FROM SH.2

RCLKM RCLKP

SDM SDP

FROM SH.3

RDM RDP

NC1 VSSRG1 VSSRG2 VSSP1* VSS1* VSSP01 VSS01 VSSR1 VSSR2 VSSDW1 VSS2* VSSP2 VSSGR VSSP0 VSSDR VSS3* VSSGR3 VSSPR1 VSSPR2 VSSPR3 VSSGR1 VSSP3 VSSW1 VSSW2 VSSP4 VSS4* VSSP5 WBIAS NC2

AGND

U57

PARITY — AGND

G1P_1 — FROM SH.3
G1M_1
GOP_1
GOM_1 — FROM SH.3
SCA1P — SCA OUTPUT TO SH.22
SCA1M

PARITY G1P G1M GOP GOM OUTP OUTM PBIAS VCOMOUT VREF VCOM BIASIN BIAS

PBIAS
C61 0.1UF
R116 31K
+5VA
VCOMOUT
VREF — SCA_REF1 FROM SH.6
2K R115
C60 0.01UF — AGND
C63 0.1UF — AGND
VCOM
BIASIN — TO SH.7 TO 21
+5VA
R114 4K
C62 0.1UF — AGND
C33 0.1UF
C48 0.1UF
AGND

SCA_REF1 TO SH.6
+5VA
ADB042AR UX1
R40110
0.1UF C654 — AGND
ADB042AR REFDES-UX1
2V
R111 100 SCA_REF2
2K R48 — AGND

SCA Ref(Offsetting the AC Coupled Input and biasing the reference pip

2.4V ADC REF

DRAWN: SACHIN SHRIRANG	DATE: DECEMBER 10, 2002	BROOKHAVEN NATIONAL LABORATORY UPTON, N.Y. 11973
CHECKED:	DATE:	TITLE: SMII Schematic
IO #:	DATE:	SHEET: 6 OF 39

IO993

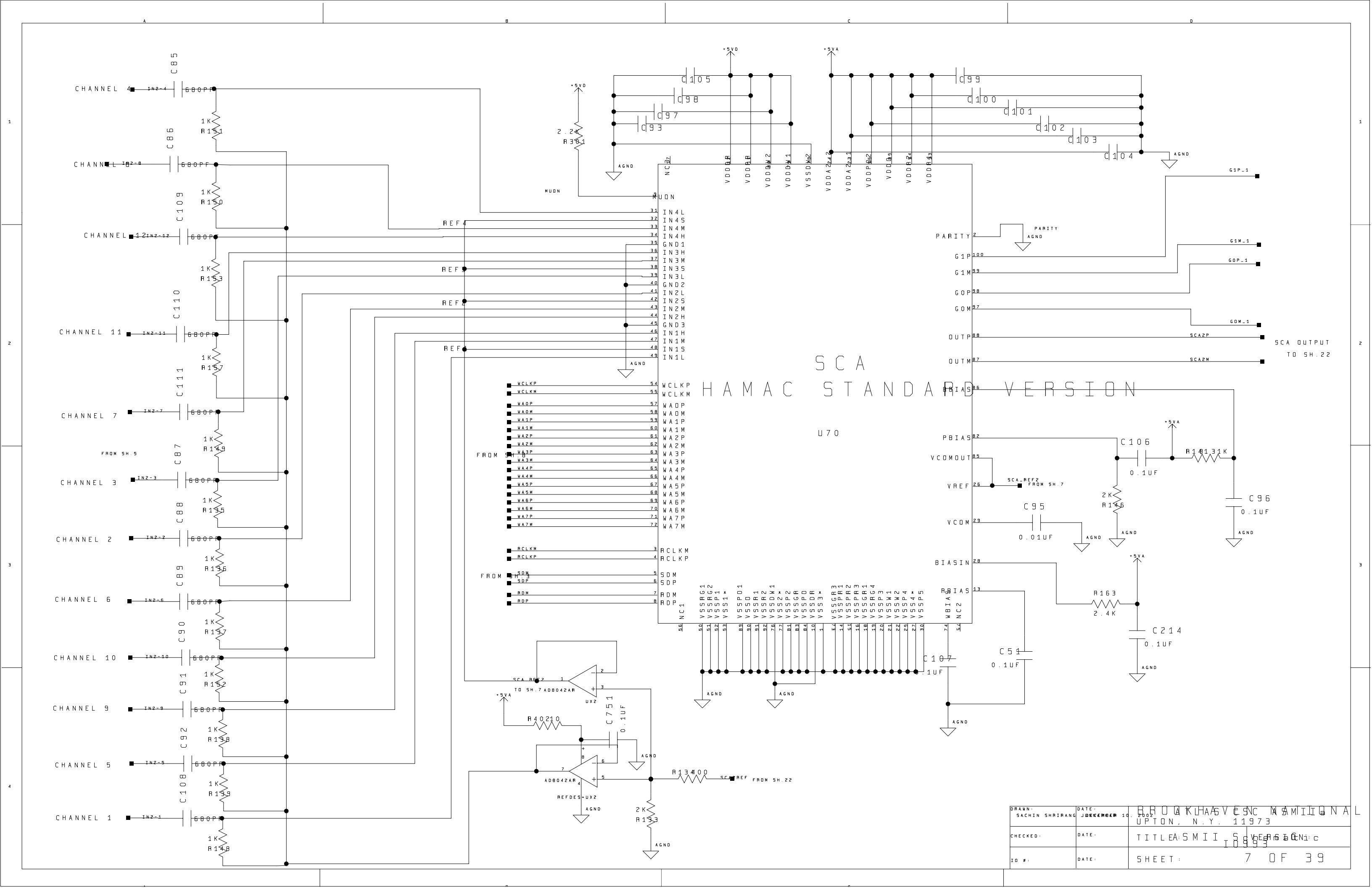
SCA
HAMAC STANDARD VERSION
U70
CHANNEL 4
CHANNEL 8
CHANNEL 12
CHANNEL 11
CHANNEL 7
CHANNEL 3
CHANNEL 2
CHANNEL 6
CHANNEL 10
CHANNEL 9
CHANNEL 5
CHANNEL 1
FROM SH.5
FROM SH.8
FROM SH.3
SCA OUTPUT
TO SH.22
SCA_REF2
FROM SH.7
SCA_REF
FROM SH.22
TO SH.7 ADB042AR
REFDES=UX2
MUON
PARITY
G1P
G1M
GOP
GOM
OUTP
OUTM
PBIAS
VCOMOUT
VREF
VCOM
BIASIN
RBIAS
C85
C86
C109
C110
C111
C87
C88
C89
C90
C91
C92
C108
C105
C98
C97
C93
C99
C100
C101
C102
C103
C104
C106
C95
C96
C107
C51
C214
C751
R163
2.4K
R146
2K
R133
R134
R140
R131
R151
R150
R153
R157
R149
R135
R136
R137
R152
R138
R139
R148
R301
2.2K
+5VD
+5VA
AGND
DRAWN: SACHIN SHRIRANG
DATE: DECEMBER 10, 2002
CHECKED:
DATE:
ID #:
DATE:
BROOKHAVEN NATIONAL
UPTON, N.Y. 11973
TITLE: ASMII SCVERSION
SHEET: 7 OF 39

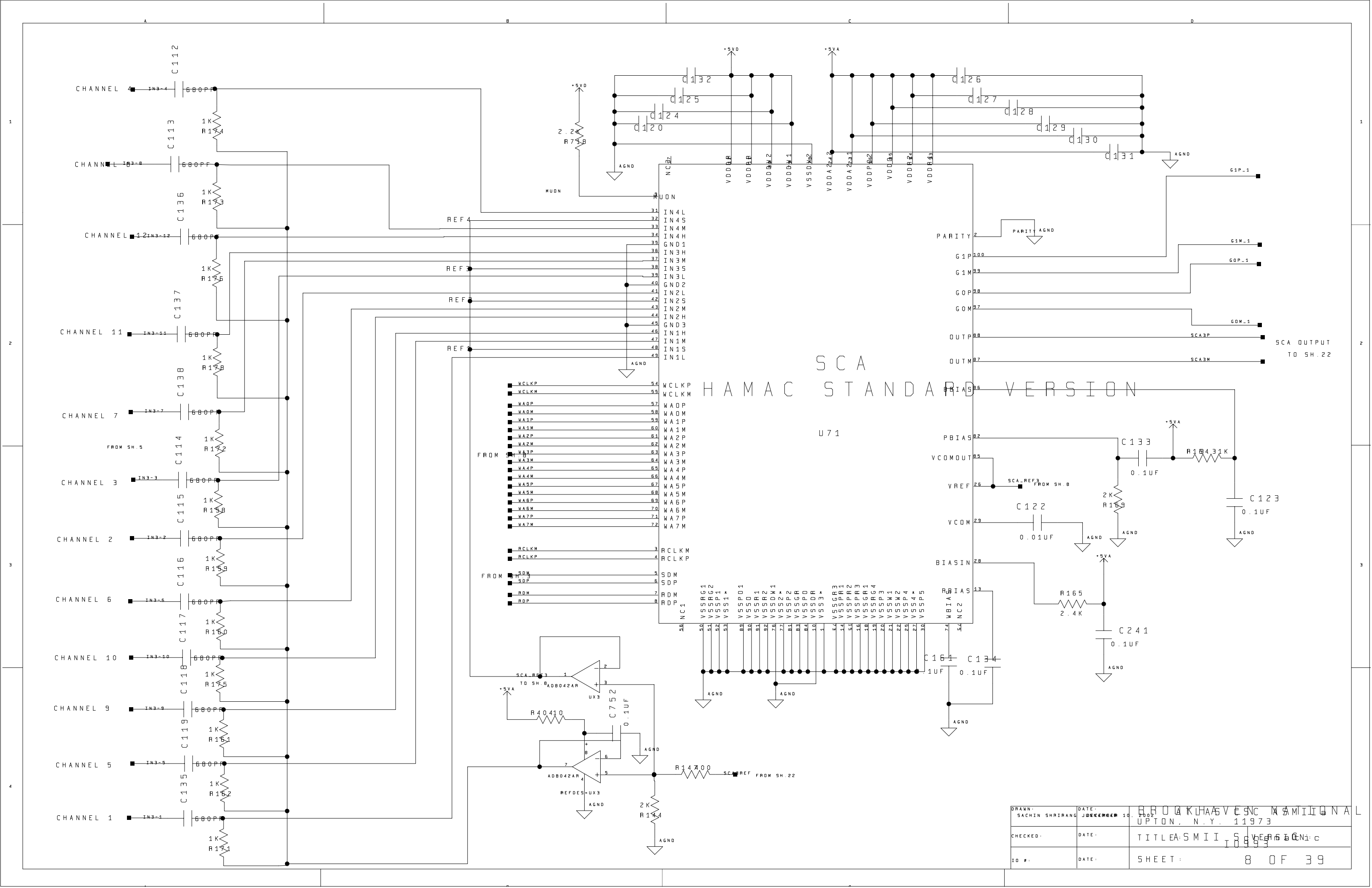
SCA
HAMAC STANDARD VERSION
U71
CHANNEL 4
CHANNEL 8
CHANNEL 12
CHANNEL 11
CHANNEL 7
CHANNEL 3
CHANNEL 2
CHANNEL 6
CHANNEL 10
CHANNEL 9
CHANNEL 5
CHANNEL 1
FROM SH.5
FROM SH.8
FROM SH.3
FROM SH.22
SCA OUTPUT
TO SH.22
MUON
PARITY
G1P
G1M
GOP
GOM
OUTP
OUTM
PBIAS
VCOMOUT
VREF
VCOM
BIASIN
REF4
REF3
REF2
REF1
C112
C113
C136
C137
C138
C114
C115
C116
C117
C118
C119
C135
C132
C125
C124
C120
C126
C127
C128
C129
C130
C131
C133
C122
C123
C241
C161
C134
C752
R165
R169
R144
R40410
R147400
R174
R173
R176
R178
R172
R158
R159
R160
R175
R161
R162
R171
R718
2.2K
2K
0.1UF
0.01UF
2.4K
+5VD
+5VA
AGND
SCA_REF3
SCA_REF
ADB042AR
UX3
REFDES=UX3
DRAWN: SACHIN SHRIRANG
DATE: DECEMBER 10, 2002
CHECKED:
ID #:
BROOKHAVEN NATIONAL
UPTON, N.Y. 11973
TITLE: ASMII SCVERSION
SHEET: 8 OF 39

SCA

HAMAC STANDARD VERSION

CHANNEL 4 — IN4-4 — C139 680PF — R197 1K
CHANNEL 8 — IN4-8 — C140 680PF — R196 1K
CHANNEL 12 — IN4-12 — C163 680PF — R199 1K
CHANNEL 11 — IN4-11 — C164 680PF — R201 1K
CHANNEL 7 — IN4-7 — C165 680PF — R195 1K
CHANNEL 3 — IN4-3 — C141 680PF — R191 1K
CHANNEL 2 — IN4-2 — C142 680PF — R192 1K
CHANNEL 6 — IN4-6 — C143 680PF — R193 1K
CHANNEL 10 — IN4-10 — C144 680PF — R198 1K
CHANNEL 9 — IN4-9 — C145 680PF — R194 1K
CHANNEL 5 — IN4-5 — C146 680PF — R185 1K
CHANNEL 1 — IN4-1 — C162 680PF — R194 1K

FROM SH.5

REF4
REF3
REF2
REF1

+5VD
2.2 R737
C159 C152 C151 C147
AGND
MUON

+5VA
C153 C154 C155 C156 C157 C158
AGND

U72

1	NC2	56	NC1
2	MUON	55	VSSDW2
3	VDDDW1	54	VSSDW1
4	VDDDW2	53	VSSDR
5	VDDDR	52	VSSDO
6	VDDDO	51	VSSDW2
7	VDDA2_1	50	VSSAG1
8	VDDA2_2	49	VSSAG2
9	VDDA2_3	48	VSSAG3
10	VDDA2_4	47	VSSAG4
11	VDDA1	46	VSSAO
12	VDDA3	45	VSSAR
13	VDDA4	44	VSSAW
14	VSSA4	43	VSSAW1
15	VSSA3	42	VSSAW2
16	VSSA2	41	VSSAW3
17	VSSA1	40	VSSAW4
18	VSSAG1	39	VSSAR1
19	VSSAG2	38	VSSAR2
20	VSSAG3	37	VSSAR3
21	VSSAG4	36	VSSAR4
22	VSSAO	35	VSSAO1
23	VSSAR	34	VSSAO2
24	VSSAW	33	VSSA1*
25	VSSAW1	32	VSSA2*
26	VSSAW2	31	VSSA3*
27	VSSAW3	30	VSSA4*
28	VSSAW4	29	VSSA5
29	VSSAR1	28	VSSAR5
30	VSSAR2	27	VSSAO5
31	VSSAR3	26	VSSAO4
32	VSSAR4	25	VSSAO3
33	VSSAO1	24	VSSAO2
34	VSSAO2	23	VSSAO1
35	VSSA1*	22	VSSAR
36	VSSA2*	21	VSSAW
37	VSSA3*	20	VSSAW1
38	VSSA4*	19	VSSAW2
39	VSSA5	18	VSSAW3
40	VSSAR5	17	VSSAW4
41	VSSAO5	16	VSSAR1
42	VSSAO4	15	VSSAR2
43	VSSAO3	14	VSSAR3
44	VSSAO2	13	VSSAR4
45	VSSAO1	12	VSSAO1
46	VSSAR	11	VSSAO2
47	VSSAW	10	VSSA1*
48	VSSAW1	9	VSSA2*
49	VSSAW2	8	VSSA3*
50	VSSAW3	7	VSSA4*
51	VSSAW4	6	VSSA5
52	VSSAR1	5	VSSAR5
53	VSSAR2	4	VSSAO5
54	VSSAR3	3	VSSAO4
55	VSSAR4	2	VSSAO3
56	VSSAO1	1	VSSAO2

1	IN4L	31	IN4L
2	IN4S	32	IN4S
3	IN4M	33	IN4M
4	IN4H	34	IN4H
5	GND1	35	GND1
6	IN3H	36	IN3H
7	IN3M	37	IN3M
8	IN3S	38	IN3S
9	IN3L	39	IN3L
10	GND2	40	GND2
11	IN2L	41	IN2L
12	IN2S	42	IN2S
13	IN2M	43	IN2M
14	IN2H	44	IN2H
15	GND3	45	GND3
16	IN1H	46	IN1H
17	IN1M	47	IN1M
18	IN1S	48	IN1S
19	IN1L	49	IN1L
20	WCLKP	54	WCLKP
21	WCLKM	55	WCLKM
22	WA0P	57	WA0P
23	WA0M	58	WA0M
24	WA1P	59	WA1P
25	WA1M	60	WA1M
26	WA2P	61	WA2P
27	WA2M	62	WA2M
28	WA3P	63	WA3P
29	WA3M	64	WA3M
30	WA4P	65	WA4P
31	WA4M	66	WA4M
32	WA5P	67	WA5P
33	WA5M	68	WA5M
34	WA6P	69	WA6P
35	WA6M	70	WA6M
36	WA7P	71	WA7P
37	WA7M	72	WA7M
38	RCLKM	3	RCLKM
39	RCLKP	4	RCLKP
40	SDM	5	SDM
41	SDP	6	SDP
42	RDM	7	RDM
43	RDP	8	RDP

FROM SH.3
FROM SH.22

SCA_REF4 — +5VA TO SH.9 — AD8042AR — U74 — C755 0.1UF — R40610
REFDES=U74 — R155 100 — SCA_REF FROM SH.22 — 2K R154 — AGND

PARITY 2 — PARITY — AGND
G1P 100 — G1P_1
G1M 99 — G1M_1
GOP 98 — GOP_1
GOM 97 — GOM_1
OUTP 88 — SCA4P
OUTM 87 — SCA4M
SCA OUTPUT TO SH.4

PBIAS 82 — C160 0.1UF — R157 31K — +5VA
VCOMOUT 85
VREF 26 — SCA_REF4 FROM SH.9
C149 0.01UF — VCOM 29 — AGND
2K R192 — AGND
C150 0.1UF — AGND
BIASIN 28 — FROM SH6
RBIAS 13 — R166 2.4K — +5VA
C268 0.1UF — AGND
C227 1UF — C200 0.1UF — AGND

DRAWN: SACHIN SHRIRANG	DATE: DECEMBER 10, 2002	BROOKHAVEN NATIONAL LABORATORY UPTON, N.Y. 11973
CHECKED:	DATE:	TITLE: SMII SCA BOARD
IO #:	DATE:	SHEET: 9 OF 39

SIZE: C — DWG NO: 10993

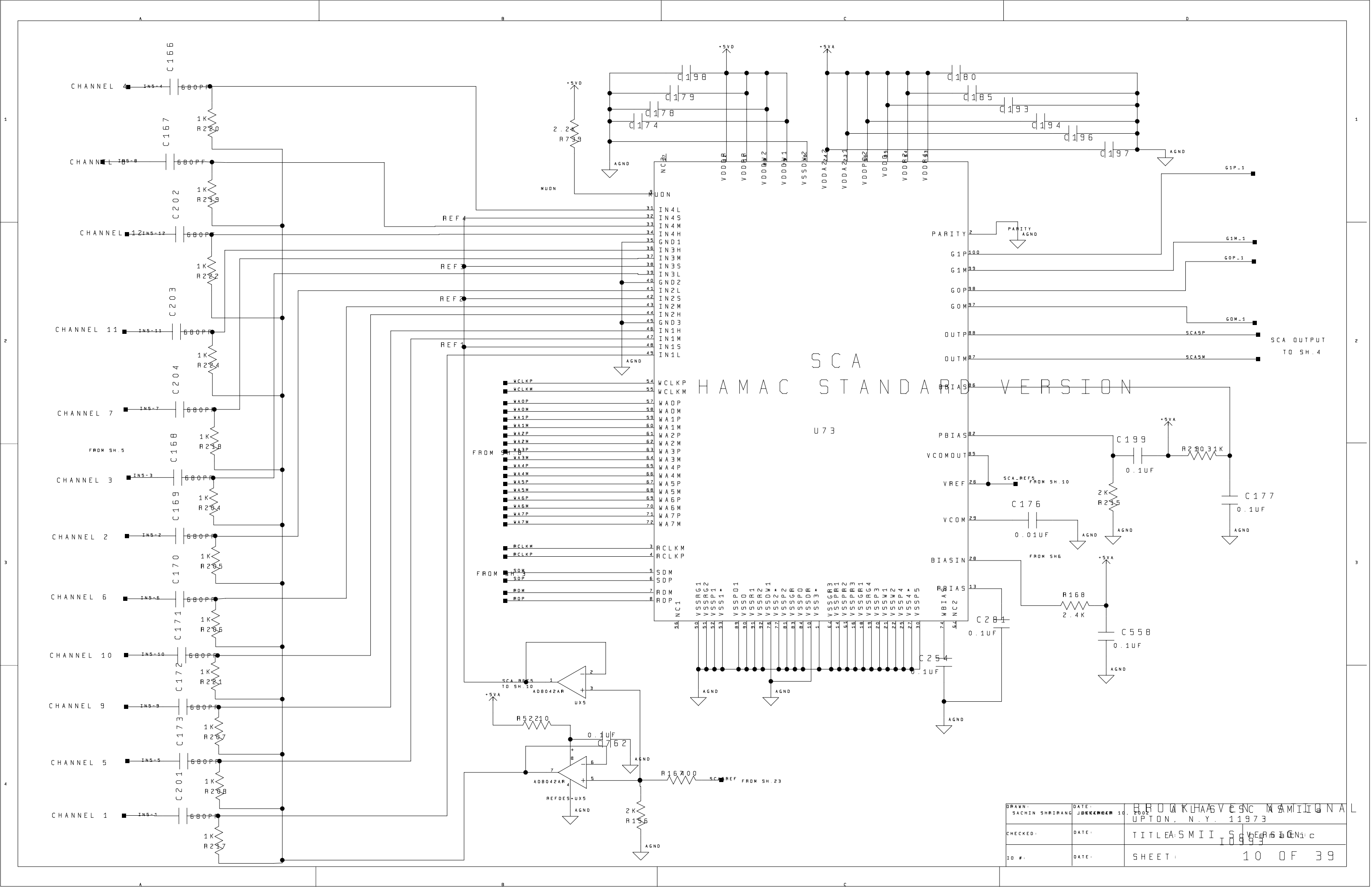
SCA
HAMAC STANDARD VERSION
U73
CHANNEL 4
CHANNEL 8
CHANNEL 12
CHANNEL 11
CHANNEL 7
CHANNEL 3
CHANNEL 2
CHANNEL 6
CHANNEL 10
CHANNEL 9
CHANNEL 5
CHANNEL 1
C166
C167
C202
C203
C204
C168
C169
C170
C171
C172
C173
C201
680PF
1K
R220
R219
R222
R224
R218
R204
R205
R206
R221
R207
R208
R217
REF4
REF3
REF2
REF1
FROM SH.5
FROM SH.8
FROM SH.3
MUON
IN4L
IN4S
IN4M
IN4H
GND1
IN3H
IN3M
IN3S
IN3L
GND2
IN2L
IN2S
IN2M
IN2H
GND3
IN1H
IN1M
IN1S
IN1L
WCLKP
WCLKM
WA0P
WA0M
WA1P
WA1M
WA2P
WA2M
WA3P
WA3M
WA4P
WA4M
WA5P
WA5M
WA6P
WA6M
WA7P
WA7M
RCLKM
RCLKP
SDM
SDP
RDM
RDP
NC1
NC2
VDDDR
VDDDW2
VDDDW1
VSSDW2
VDDA2
VDDP
VDDR2
VDDR1
+5VD
+5VA
AGND
2.2K
R739
C198
C179
C178
C174
C180
C185
C193
C194
C196
C197
PARITY
G1P
G1M
GOP
GOM
OUTP
OUTM
PBIAS
VCOMOUT
VREF
VCOM
BIASIN
RBIAS
G1P_1
G1M_1
GOP_1
GOM_1
SCA5P
SCA5M
SCA OUTPUT
TO SH.4
C199
0.1UF
R210
31K
C177
0.1UF
2K
R215
SCA_REF5
FROM SH.10
C176
0.01UF
FROM SH6
R168
2.4K
C558
0.1UF
C281
0.1UF
C254
0.1UF
SCA_REF5
TO SH.10
AD8042AR
UX5
R522
10
0.1UF
C762
REFDES=UX5
R167
400
SCA_REF
FROM SH.23
2K
R156
DRAWN:
SACHIN SHRIRANG
DATE:
DECEMBER 10, 2002
CHECKED:
DATE:
ID #:
DATE:
BROOKHAVEN NATIONAL
UPTON, N.Y. 11973
TITLE: ASMII SCVERSION
SHEET: 10 OF 39

SCA

HAMAC STANDARD VERSION

U74

CHANNEL 4 — IN6-4 — C205 680PF — R243 1K
CHANNEL 8 — IN6-8 — C206 680PF — R242 1K
CHANNEL 12 — IN6-12 — C229 680PF — R245 1K
CHANNEL 11 — IN6-11 — C230 680PF — R247 1K
CHANNEL 7 — IN6-7 — C231 680PF — R241 1K
CHANNEL 3 — IN6-3 — C207 680PF — R287 1K
CHANNEL 2 — IN6-2 — C208 680PF — R288 1K
CHANNEL 6 — IN6-6 — C209 680PF — R289 1K
CHANNEL 10 — IN6-10 — C210 680PF — R244 1K
CHANNEL 9 — IN6-9 — C211 680PF — R240 1K
CHANNEL 5 — IN6-5 — C212 680PF — R231 1K
CHANNEL 1 — IN6-1 — C228 680PF — R240 1K

FROM SH.5

REF4
REF3
REF2
REF1

+5VD
2.2K R741
AGND
MUON

C225 C218 C217 C213

+5VA
C219 C220 C221 C222 C223 C224
AGND

U74 pins:
NC2 MUON
VDDA1 VDDA2 VDDA3 VDDA4 VDDA5 VDDA6 VDDA7 VDDA8 VDDP1 VDDP2 VDDR1 VDDR2 VDDR3 VDDR4 VDDW1 VDDW2 VSSDIG
IN4L IN4S IN4M IN4H GND1 IN3H IN3M IN3S IN3L GND2 IN2L IN2S IN2M IN2H GND3 IN1H IN1M IN1S IN1L
WCLKP WCLKM
WA0P WA0M WA1P WA1M WA2P WA2M WA3P WA3M WA4P WA4M WA5P WA5M WA6P WA6M WA7P WA7M
RCLKM RCLKP
SDM SDP
RDM RDP
NC1
VSSARG1 VSSARG2 VSSP1 VSS1 VSSPO1 VSSO VSSAR1 VSSAR2 VSSDW1 VSSP2 VSSGR VSSPO VSSDR VSS3 VSSGR3 VSSPR1 VSSPR2 VSSPR3 VSSGR1 VSSAG4 VSSP3 VSSW1 VSSW2 VSSP4 VSS4 VSSP5
PARITY G1P G1M GOP GOM OUTP OUTM PBIAS VCOMOUT VREF VCOM BIASIN PBIAS NC2

PARITY AGND
G1P_1 G1M_1 GOP_1 GOM_1
SCA6P SCA6M
SCA OUTPUT TO SH.4

PBIAS — C226 0.1UF — +5VA — R233 31K — C216 0.1UF — AGND
VCOMOUT
VREF — SCA_REF6 FROM SH.11 — C215 0.01UF — AGND — 2K R238 — AGND
VCOM
BIASIN — FROM SH6 — +5VA — R186 2.4K — C559 0.1UF — AGND
PBIAS — C298 0.1UF
C301 0.1UF — AGND

FROM SH.3
WCLKP WCLKM WA0P WA0M WA1P WA1M WA2P WA2M WA3P WA3M WA4P WA4M WA5P WA5M WA6P WA6M WA7P WA7M RCLKM RCLKP SDM SDP RDM RDP

SCA_REF6 TO SH.11 — ADB042AR UX6 — +5VA — R52310 — 0.1UF C763 — AGND
REFDES-UX6 — R17200 — SCA_REF6 FROM SH.23 — 2K R1150 — AGND

DRAWN: SACHIN SHRIRANG	DATE: DECEMBER 10, 2002	BROOKHAVEN NATIONAL LABORATORY UPTON, N.Y. 11973
CHECKED:	DATE:	TITLE: SMII SCA BOARD
IO #:	DATE:	SHEET: 11 OF 39

ID993

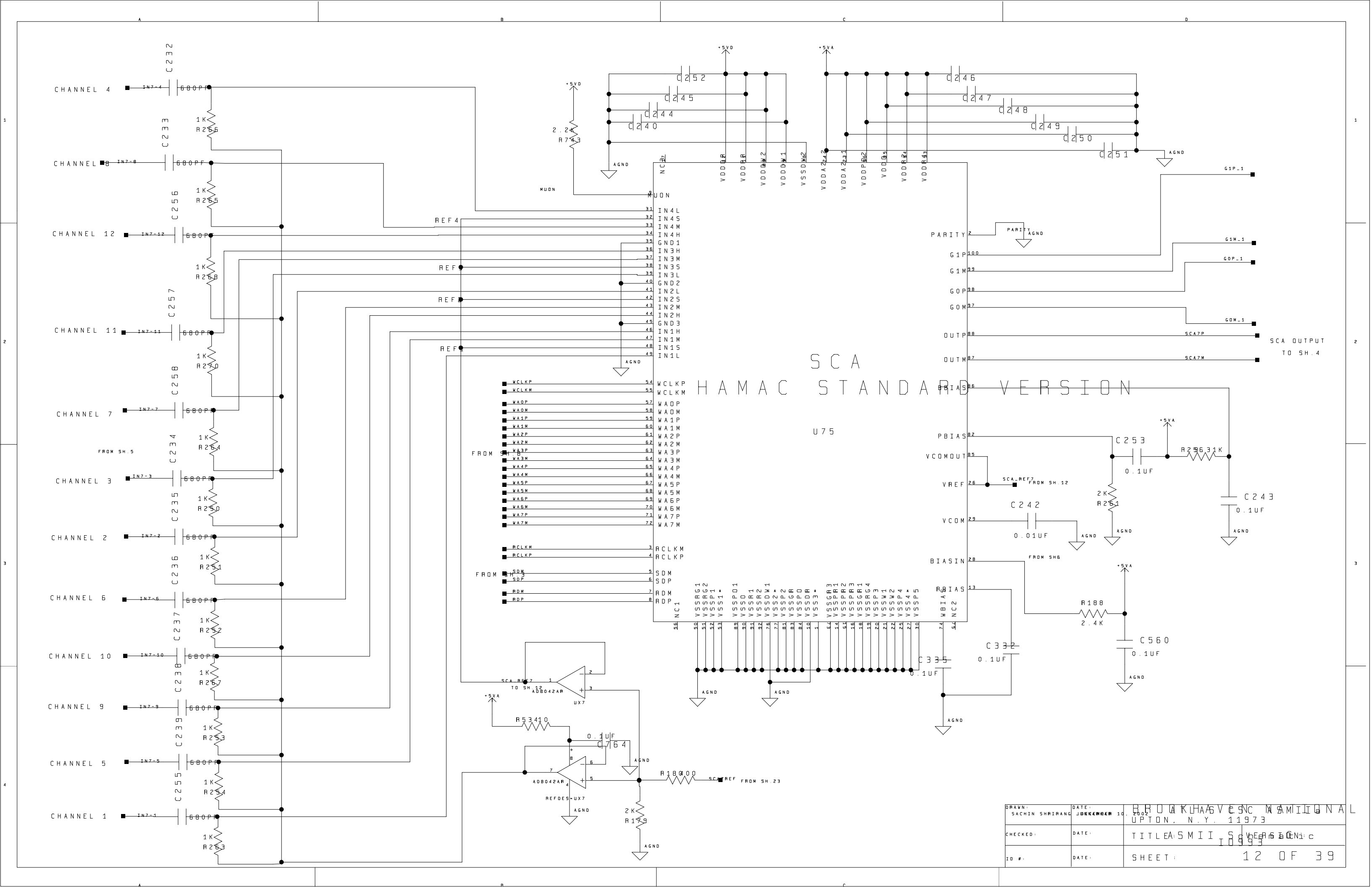

DRAWN: SACHIN SHRIRANG	DATE: DECEMBER 10, 2002	BROOKHAVEN NATIONAL LAB. UPTON, N.Y. 11973
CHECKED:	DATE:	TITLE: ASMII SCVERSION
ID #:	DATE:	SHEET: 12 OF 39

SCA

HAMAC STANDARD VERSION

CHANNEL 4 — INB-4 — 680PF — C259 — 1K R259
CHANNEL 8 — INB-8 — 680PF — C260 — 1K R258
CHANNEL 12 — INB-12 — 680PF — C283 — 1K R251
CHANNEL 11 — INB-11 — 680PF — C284 — 1K R253
CHANNEL 7 — INB-7 — 680PF — C285 — 1K R257
CHANNEL 3 — INB-3 — 680PF — C261 — 1K R273
CHANNEL 2 — INB-2 — 680PF — C262 — 1K R274
CHANNEL 6 — INB-6 — 680PF — C263 — 1K R275
CHANNEL 10 — INB-10 — 680PF — C264 — 1K R290
CHANNEL 9 — INB-9 — 680PF — C265 — 1K R276
CHANNEL 5 — INB-5 — 680PF — C266 — 1K R277
CHANNEL 1 — INB-1 — 680PF — C282 — 1K R286

REF4 REF3 REF2 REF1

FROM SH.5

+5VD

2.2K R745

C279 C272 C271 C267

+5VA

C273 C274 C275 C276 C277 C278

AGND

MUON

U76

31	IN4L	54	WCLKP
32	IN4S	55	WCLKM
33	IN4M	57	WA0P
34	IN4H	58	WA0M
35	GND1	59	WA1P
36	IN3H	60	WA1M
37	IN3M	61	WA2P
38	IN3S	62	WA2M
39	IN3L	63	WA3P
40	GND2	64	WA3M
41	IN2L	65	WA4P
42	IN2S	66	WA4M
43	IN2M	67	WA5P
44	IN2H	68	WA5M
45	GND3	69	WA6P
46	IN1H	70	WA6M
47	IN1M	71	WA7P
48	IN1S	72	WA7M
49	IN1L		

FROM SH.8

3	RCLKM	5	SDM
4	RCLKP	6	SDP
		7	RDM
		8	RDP

FROM SH.3

1	NC1	2	MUON
50	VSSRG1	51	VSSRG2
52	VSSP1*	53	VSS1*
89	VSSPO1	90	VSSO
91	VSSR1	92	VSSR2
76	VSSDW1	77	VSSP2
81	VSSGR	83	VSSPO
84	VSSDR	10	VSS3*
1		64	VSSGR3
14	VSSPR1	15	VSSPR2
16	VSSPR3	18	VSSGR1
19	VSSP3	20	VSSW1
21	VSSW2	22	VSSP4
25	VSS4*	27	VSSP5
30		74	WBIAS
54	NC2	13	RBIAS
5	VDDA1.8	6	VDDA2.5_1
7	VDDA1.8	8	VDDA2.5_2
9	VDDDW2	11	VDDP2.5
12	VDDDW1	17	VDDA2.5_3
24	VSSDW2	23	VDDA2.5_4
		28	VDDA2.5_5

PARITY 2 — PARITY AGND
G1P 100 — G1P_1
G1M 99 — G1M_1
GOP 98 — GOP_1
GOM 97 — GOM_1
OUTP 88 — SCABP — SCA OUTPUT TO SH.4
OUTM 87 — SCABM

PBIAS 82 — C280 0.1UF — R53931K — +5VA
VCOMOUT 85
VREF 26 — SCA_REFB FROM SH.13
C269 0.01UF — VCOM 29 — 2K R284 — C270 0.1UF
BIASIN 28 — FROM SH6 — R189 2.4K — +5VA — C562 0.1UF

C360 0.1UF
C363 0.1UF

SCA_REFB TO SH.13 — ADB042AR UXB — R53610 — C765 0.1UF
ADB042AR REFDES-UXB — R193100 — SCAREF FROM SH.23 — 2K R190

DRAWN: SACHIN SHRIANG	DATE: DECEMBER 10, 2002	BROOKHAVEN NATIONAL LABORATORY UPTON, N.Y. 11973
CHECKED:	DATE:	TITLE: ASMII SCHEMATIC
IO #:	DATE:	SHEET: 13 OF 39

ID993

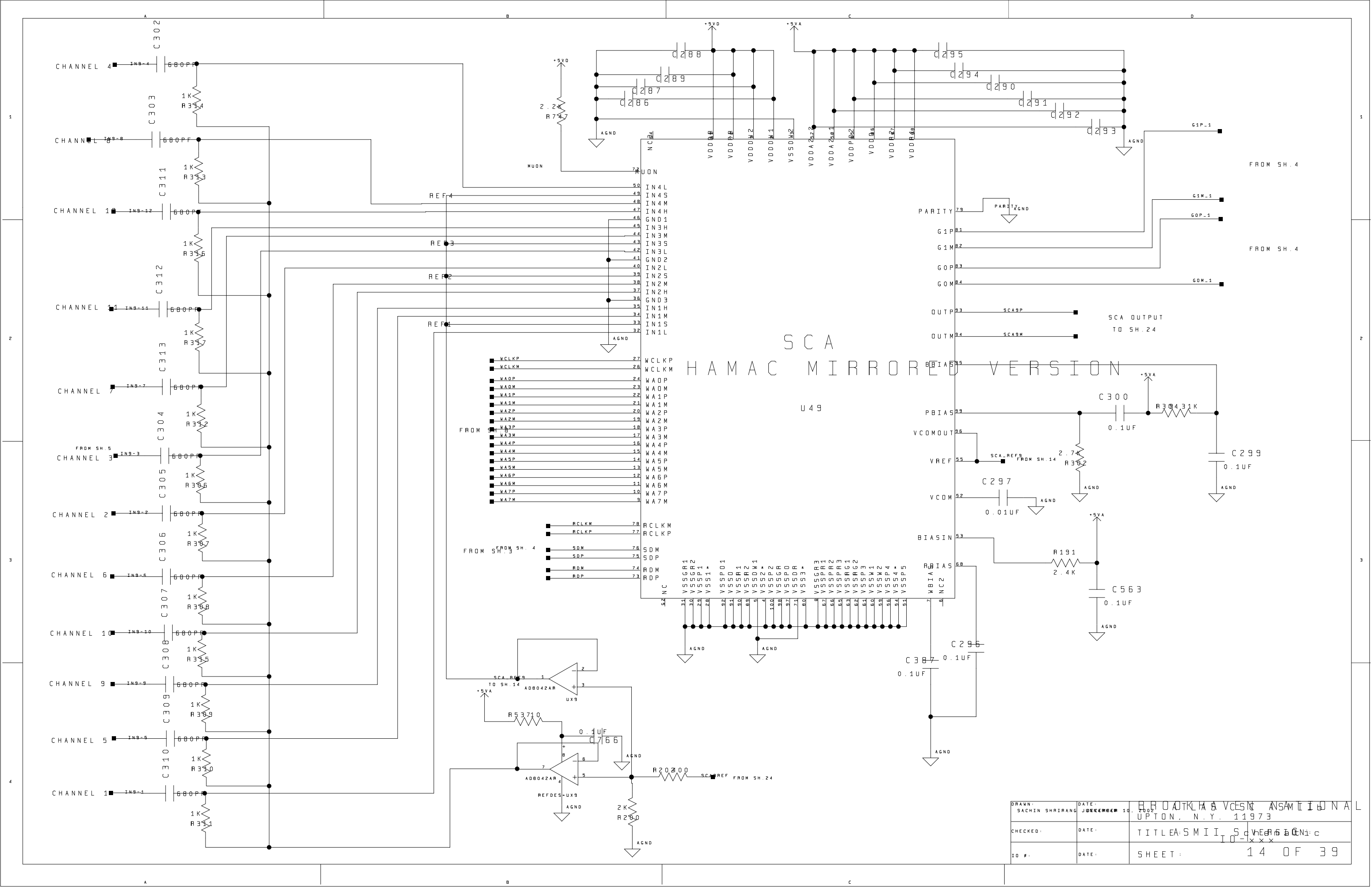
SCA
HAMAC MIRRORED VERSION
U49
CHANNEL 4
CHANNEL 8
CHANNEL 12
CHANNEL 11
CHANNEL 7
CHANNEL 3
CHANNEL 2
CHANNEL 6
CHANNEL 10
CHANNEL 9
CHANNEL 5
CHANNEL 1
FROM SH.5
FROM SH.4
FROM SH.3
FROM SH.14
FROM SH.24
SCA OUTPUT
TO SH.24
SCA_REF9
SCA_REF
REF4
REF3
REF2
REF1
MUON
PARITY
G1P
G1M
G0P
G0M
OUTP
OUTM
BBIAS
PBIAS
VCOMOUT
VREF
VCOM
BIASIN
RBIAS
C300
0.1UF
C299
0.1UF
C297
0.01UF
R191
2.4K
C563
0.1UF
C296
0.1UF
C387
0.1UF
C288
C289
C287
C286
C295
C294
C290
C291
C292
C293
R747
2.2K
R302
2.7K
R301
31K
R53
710
C766
0.1UF
R200
400
R200
2K
ADB042AR
UX9
REFDES=UX9
AGND
+5VD
+5VA
DRAWN: SACHIN SHRIRANG
DATE: DECEMBER 10, 2002
CHECKED:
DATE:
ID #:
DATE:
BROOKHAVEN NATIONAL
UPTON, N.Y. 11973
TITLE: ASMII SCHEMATIC
SHEET: 14 OF 39

SCA

HAMAC MIRRORED VERSION

U12

CHANNEL 4 — IN10-4 — C314 680PF — R339 1K
CHANNEL 8 — IN10-8 — C340 680PF — R335 1K
CHANNEL 12 — IN10-12 — C321 680PF — R337 1K
CHANNEL 11 — IN10-11 — C322 680PF — R328 1K
CHANNEL 7 — IN10-7 — C323 680PF — R334 1K
CHANNEL 3 — FROM SH.5 — IN10-3 — C341 680PF — R319 1K
CHANNEL 2 — IN10-2 — C315 680PF — R320 1K
CHANNEL 6 — IN10-6 — C316 680PF — R321 1K
CHANNEL 10 — IN10-10 — C317 680PF — R326 1K
CHANNEL 9 — IN10-9 — C318 680PF — R322 1K
CHANNEL 5 — IN10-5 — C319 680PF — R323 1K
CHANNEL 1 — IN10-1 — C320 680PF — R338 1K

REF4 REF3 REF2 REF1

+5VD: C336 C324 C339 C338; 2.2K R749; AGND
+5VA: C337 C329 C325 C326 C327 C328; AGND

MUON
NC 52 VDDA8R 31 VDDA7R 30 VDDA2W 29 VDDA1W 28 VSSDW2 92 VDDA2R 91 VDDA1R 90 VDDP2W 89 VDDP1W 5 VDDA6W 4 VDDA7W 100 VDDA8W 99
MUON 72
IN4L 50 IN4S 49 IN4M 48 IN4H 47 GND1 46 IN3H 45 IN3M 44 IN3S 43 IN3L 42 GND2 41 IN2L 40 IN2S 39 IN2M 38 IN2H 37 GND3 36 IN1H 35 IN1M 34 IN1S 33 IN1L 32
AGND

WCLKP 27 WCLKM 26
WA0P 24 WA0M 23 WA1P 22 WA1M 21 WA2P 20 WA2M 19 WA3P 18 WA3M 17 WA4P 16 WA4M 15 WA5P 14 WA5M 13 WA6P 12 WA6M 11 WA7P 10 WA7M 9
FROM SH.3

RCLKM 78 RCLKP 77
SDM 76 SDP 75 RDM 74 RDP 73
FROM SH.4

NC 52 VSSGR1 31 VSSGR2 30 VSSP1* 29 VSS11 28 VSSPO1 92 VSSO 91 VSSR1 90 VSSR2 89 VSSDW1 5 VSS2* 4 VSSPO 100 VSSGR 98 VSSPO 97 VSSDR 96 VSS3* 71 VSSGR3 80 VSSPR1 67 VSSPR2 66 VSSPR3 65 VSSRG1 64 VSSRG2 63 VSSP3 62 VSSW1 61 VSSW2 60 VSSP4 59 VSS4* 56 VSSP5 54 VSS1 51
AGND AGND

PARITY 79 — PARITY AGND
G1P 81 — G1P_1 — FROM SH.4
G1M 82 — G1M_1
GOP 83 — GOP_1 — FROM SH.4
GOM 84 — GOM_1
OUTP 93 — SCA10P — SCA OUTPUT TO SH.24
OUTM 94 — SCA10M

PBIAS 95 — +5VA — C334 0.1UF — R356 31K
PBIAS 39 — C333 0.1UF — AGND
VCOMOUT 96
VREF 55 — SCA_REF10 FROM SH.15 — C331 0.01UF — AGND — 2.7K R334 — AGND
VCOM 52 — AGND
BIASIN 53 — +5VA — R209 2.4K — C564 0.1UF — AGND
RBIAS 68
WBIAS 7 — C330 0.1UF — AGND
NC2 6 — C390 0.1UF — AGND

SCA_REF10 1 — TO SH.15 — ADB042AR UX10 — +5VA
R53810 — 0.1UF C767 — AGND
ADB042AR 4 — REFDES=UX10 — AGND
R21300 — SCA_OREF FROM SH.24
2K R2183 — AGND

DRAWN: SACHIN SHRIRANG	DATE: DECEMBER 10, 2002	BROOKHAVEN NATIONAL LABORATORY UPTON, N.Y. 11973
CHECKED:	DATE:	TITLE: SMII Schematic
IO #:	DATE:	SHEET: 15 OF 39

SCA

HAMAC MIRRORED VERSION

U16

CHANNEL 4 — IN11-4 — C342 680PF — R352 1K
CHANNEL 8 — IN11-8 — C368 680PF — R348 1K
CHANNEL 12 — IN11-12 — C349 680PF — R350 1K
CHANNEL 11 — IN11-11 — C350 680PF — R351 1K
CHANNEL 7 — IN11-7 — C351 680PF — R347 1K
CHANNEL 3 (FROM SH.5) — IN11-3 — C369 680PF — R342 1K
CHANNEL 2 — IN11-2 — C343 680PF — R343 1K
CHANNEL 6 — IN11-6 — C344 680PF — R344 1K
CHANNEL 10 — IN11-10 — C345 680PF — R349 1K
CHANNEL 9 — IN11-9 — C346 680PF — R345 1K
CHANNEL 5 — IN11-5 — C347 680PF — R346 1K
CHANNEL 1 — IN11-1 — C348 680PF — R351 1K

REF4
REF
REF
REF

+5VD
C364 C352 C367 C366
2.2K R754
AGND

+5VA
C365 C357 C353 C354 C355 C356
AGND

MUON
NC1 MUON 78
IN4L 50
IN4S 49
IN4M 48
IN4H 47
GND1 46
IN3H 45
IN3M 44
IN3S 43
IN3L 42
GND2 41
IN2L 40
IN2S 39
IN2M 38
IN2H 37
GND3 36
IN1H 35
IN1M 34
IN1S 33
IN1L 32
AGND

FROM SH.5
WCLKP 27
WCLKM 26
WA0P 24
WA0M 23
WA1P 22
WA1M 21
WA2P 20
WA2M 19
WA3P 18
WA3M 17
WA4P 16
WA4M 15
WA5P 14
WA5M 13
WA6P 12
WA6M 11
WA7P 10
WA7M 9

RCLKM 8
RCLKP 7
FROM SH.4
SDM 6
SDP 5
RDM 4
RDP 3

NC 52
VSSGR1 31
VSSP1* 30
VSS1* 29
VSSP01 28
VSSO 92
VSSR1 91
VSSR2 90
VSSDN1 89
VSS2* 5
VSSP2 4
VSSGR 100
VSSP0 99
VSSDR 98
VSS3* 97
VSSGR3 71
VSSPR1 80
VSSPR2 8
VSSPR3 6
VSSRG1 7
VSSRG2 6
VSSP3 5
VSSW1 62
VSSW2 61
VSSP4* 60
VSS4* 59
VSSP5 58
NC 51

VDDA1 8
VDDA2 8
VDDP1 8
VDDA3 2
VDDA4 2
VDDP2 2
VDDA5 1
VDDA6 1
VSSDN2 2
VSSA 72
VDDA7 2
VDDP3 2
VDDA8 6
VDDA9 7
VDDP4 8
VDDA10 8

PARITY 79
G1P 81
G1M 82
GOP 83
GOM 84
PARITXGND
G1P_1 — FROM SH.4
G1M_1
GOP_1 — FROM SH.4
GOM_1

OUTP 93 — SCA11P
OUTM 94 — SCA11M
SCA OUTPUT TO SH.24

PBIAS 99
VCOMOUT 96
VREF 55 — SCA_REF11 — FROM SH16
VCOM 52
BIASIN 53
BBIAS 68
C362 0.1UF
R359 31K
C361 0.1UF
C359 0.01UF
R357 2.7K
R211 2.4K
C566 0.1UF
C416 0.1UF
C358 0.1UF

SCA_REF11 — TO SH.16
AD8042AR UX11
R54810
0.1UF C768
AD8042AR REFDES=UX11
R22300 — SCA_1REF — FROM SH.24
2K R216

DRAWN: SACHIN SHRIRANG	DATE: DECEMBER 10, 2002	BROOKHAVEN NATIONAL LABORATORY UPTON, N.Y. 11973
CHECKED:	DATE:	TITLE: SMII Schematic IO-xxx
IO #:	DATE:	SHEET: 16 OF 39

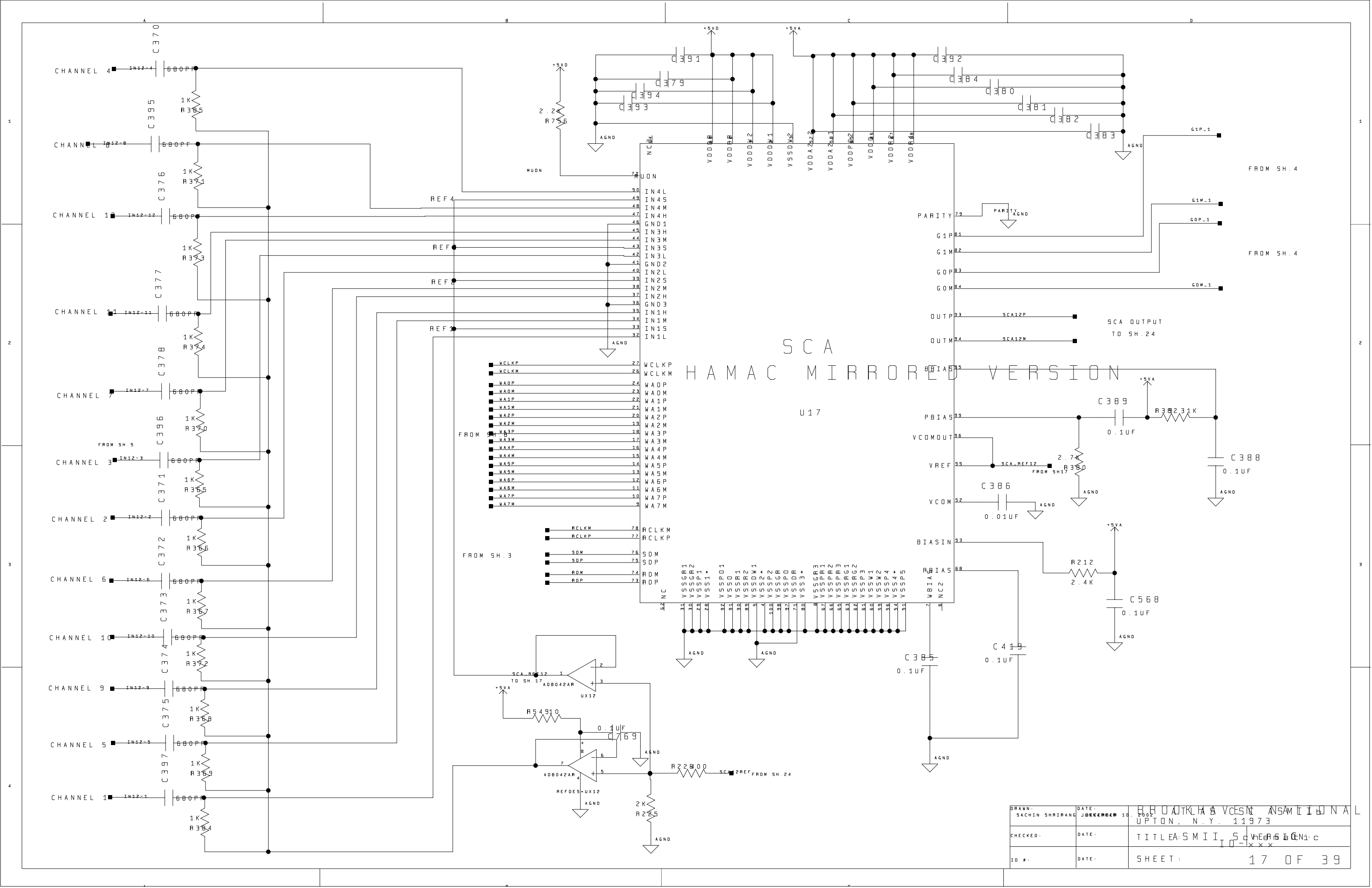
SCA
HAMAC MIRRORED VERSION
U17
CHANNEL 4
CHANNEL 8
CHANNEL 12
CHANNEL 11
CHANNEL 7
CHANNEL 3
CHANNEL 2
CHANNEL 6
CHANNEL 10
CHANNEL 9
CHANNEL 5
CHANNEL 1
FROM SH.5
FROM SH.4
FROM SH.3
FROM SH.8
FROM SH.17
FROM SH.24
SCA OUTPUT
TO SH.24
PARITY
G1P
G1M
G0P
G0M
OUTP
OUTM
PBIAS
VCOMOUT
VREF
VCOM
BIASIN
RBIAS
MUON
REF4
REF3
REF2
REF1
WCLKP
WCLKM
RCLKM
RCLKP
SDM
SDP
RDM
RDP
ADB042AR
UX12
REFDES=UX12
DRAWN: SACHIN SHRIANG
DATE: DECEMBER 10, 2002
CHECKED:
DATE:
ID #:
DATE:
BROOKHAVEN NATIONAL LABORATORY
UPTON, N.Y. 11973
TITLE: ASMII SCA
SHEET: 17 OF 39

SCA

HAMAC MIRRORED VERSION

U18

CHANNEL 4 — IN13-4 — 680PF — C398 — 1K R408
CHANNEL 8 — IN13-8 — 680PF — C424 — 1K R394
CHANNEL 12 — IN13-12 — 680PF — C405 — 1K R396
CHANNEL 11 — IN13-11 — 680PF — C406 — 1K R397
CHANNEL 7 — IN13-7 — 680PF — C407 — 1K R393
CHANNEL 3 (FROM SH 5) — IN13-3 — 680PF — C425 — 1K R388
CHANNEL 2 — IN13-2 — 680PF — C399 — 1K R389
CHANNEL 6 — IN13-6 — 680PF — C400 — 1K R390
CHANNEL 10 — IN13-10 — 680PF — C401 — 1K R395
CHANNEL 9 — IN13-9 — 680PF — C402 — 1K R391
CHANNEL 5 — IN13-5 — 680PF — C403 — 1K R392
CHANNEL 1 — IN13-1 — 680PF — C404 — 1K R407

REF4
REF3
REF2
REF1

+5VD
+5VA
AGND

C420 C408 C423 C422 — 2.2K R758
C421 C413 C409 C410 C411 C412

MUON (72)
IN4L (50) IN4S (49) IN4M (48) IN4H (47) GND1 (46) IN3H (45) IN3M (44) IN3S (43) IN3L (42) GND2 (41) IN2L (40) IN2S (39) IN2M (38) IN2H (37) GND3 (36) IN1H (35) IN1M (34) IN1S (33) IN1L (32)

WCLKP (27) WCLKM (26)
WA0P (24) WA0M (23) WA1P (22) WA1M (21) WA2P (20) WA2M (19) WA3P (18) WA3M (17) WA4P (16) WA4M (15) WA5P (14) WA5M (13) WA6P (12) WA6M (11) WA7P (10) WA7M (9)

FROM SH. 3

RCLKM (8) RCLKP (7)
SDM (6) SDP (5) RDM (4) RDP (3)
FROM SH. 4

NC (52)
VSSGR1 (31) VSSGR2 (30) VSSP1* (29) VSS1* (28) VSSP01 (92) VSSO (91) VSSR1 (90) VSSR2 (89) VSSW1* (5) VSSG2 (4) VSSGR (100) VSSO (98) VSS2* (97) VSSO (71) VSS3* (80) VSSGR3 (8) VSSGR1 (67) VSSPR2 (66) VSSPR3 (65) VSSRG1 (63) VSSRG2 (62) VSSP3 (61) VSSW1 (60) VSSW2 (59) VSSP4* (56) VSSP5 (54) VSSP5 (51)

VDDA1 (8) VDDA (6) VDDW2 (2) VDDW1 (1) VSSO2* (2) VDDA2 (7) VDDA2 (8) VDDP2 (1) VDDP2 (2) VDDA (6) VDDL2 (7) VDDR2 (10)

PARITY (79) — PARITY — AGND
G1P (81) — G1P_1 — FROM SH. 4
G1M (82) — G1M_1
GOP (83) — GOP_1 — FROM SH. 4
GOM (84) — GOM_1
OUTP (93) — SCA13P — SCA OUTPUT TO SH. 25
OUTM (94) — SCA13M

PBIAS (95) — +5VA — C418 0.1UF — R405 31K — C417 0.1UF — AGND
VCOMOUT (96)
VREF (55) — SCA_REF13 — FROM SH18 — 2.7K R403 — AGND
C415 0.01UF — VCOM (52) — AGND
BIASIN (53) — +5VA — R214 2.4K — C569 0.1UF — AGND
BIAS (68) — C414 0.1UF — AGND
C414 0.1UF — AGND

SCA_REF13 — TO SH. 18 — ADB042AR UX13 — +5VA — R55010 — 0.1UF C170 — AGND
ADB042AR UX13 — REFDES=UX13 — AGND — R23500 — SCA13REF — FROM SH. 25
2K R256 — AGND

DRAWN: SACHIN SHRIRANG	DATE: DECEMBER 10, 2002	BROOKHAVEN NATIONAL LABORATORY UPTON, N.Y. 11973
CHECKED:	DATE:	TITLE: SMII, Schematic
ID #:	DATE:	SHEET: 18 OF 39

IO-1xxx

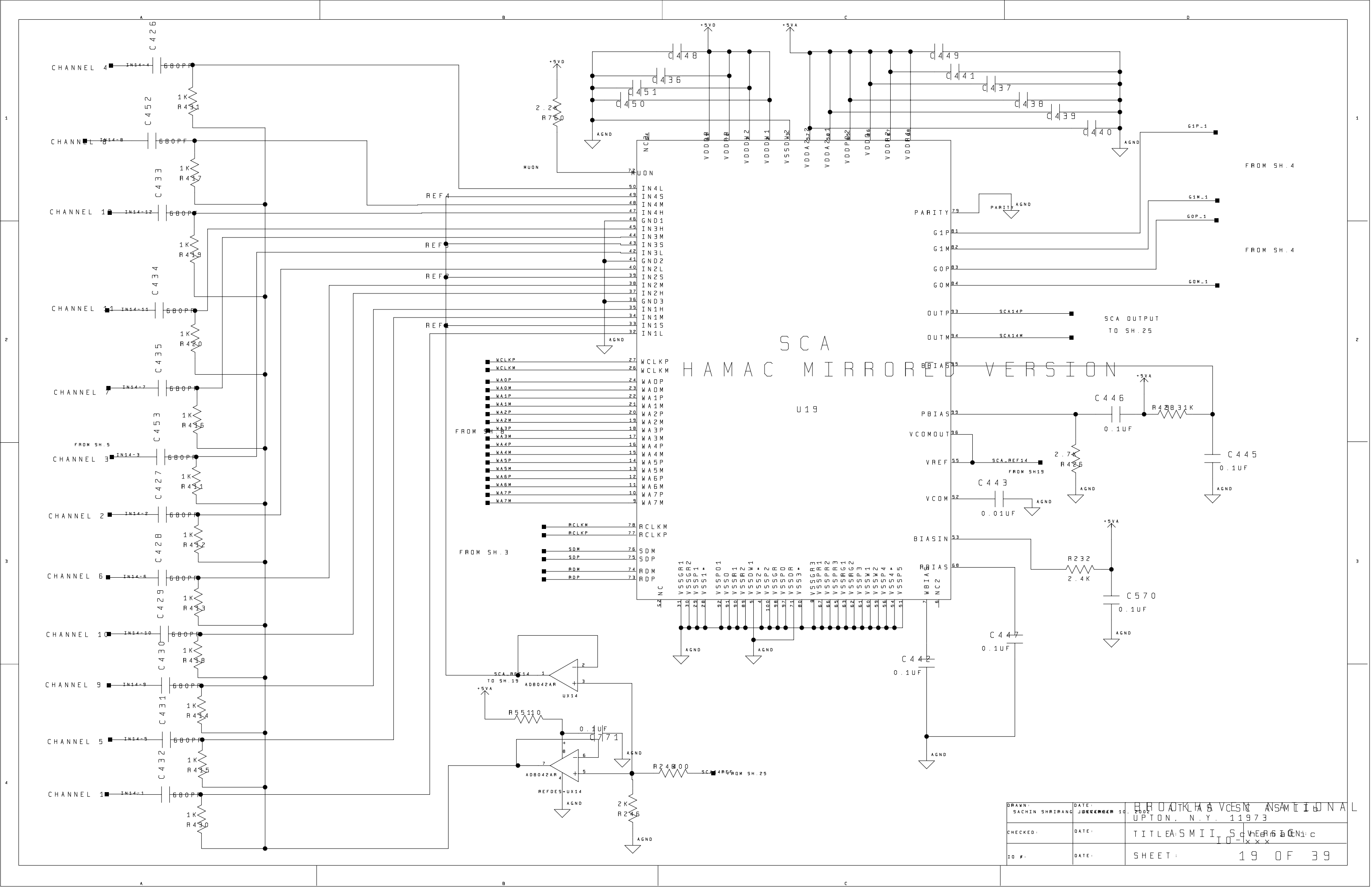
SCA
HAMAC MIRRORED VERSION
U19
CHANNEL 4
CHANNEL 8
CHANNEL 12
CHANNEL 11
CHANNEL 7
CHANNEL 3
CHANNEL 2
CHANNEL 6
CHANNEL 10
CHANNEL 9
CHANNEL 5
CHANNEL 1
FROM SH.5
FROM SH.4
FROM SH.3
FROM SH.8
FROM SH.25
SCA OUTPUT
TO SH.25
SCA_REF14
FROM SH19
TO SH.19
ADB042AR
UX14
REFDES-UX14
MUON
PARITY
G1P
G1M
GOP
GOM
OUTP
OUTM
BBIAS
PBIAS
VCOMOUT
VREF
VCOM
BIASIN
RBIAS
C446
0.1UF
C445
0.1UF
C443
0.01UF
C570
0.1UF
C447
0.1UF
C442
0.1UF
R232
2.4K
R426
2.7K
R431
1K
R417
1K
R419
1K
R420
1K
R416
1K
R411
1K
R412
1K
R413
1K
R418
1K
R414
1K
R415
1K
R430
1K
R760
2.2K
R55110
0.1UF
C771
R24800
2K
R246
AGND
+5VD
+5VA
DRAWN: SACHIN SHRIRANG
DATE: DECEMBER 10, 2002
CHECKED:
DATE:
IO #:
DATE:
BROOKHAVEN NATIONAL
UPTON, N.Y. 11973
TITLE: ASMII Schematic
VERSION: IO-xxx
SHEET: 19 OF 39

SCA

HAMAC MIRRORED VERSION

U21

SCA OUTPUT TO SH.25

FROM SH.4

FROM SH.3

FROM SH.5

REF1 REF2 REF3 REF4

CHANNEL 1 CHANNEL 5 CHANNEL 9 CHANNEL 13 CHANNEL 6 CHANNEL 2 CHANNEL 3 CHANNEL 7 CHANNEL 11 CHANNEL 15 CHANNEL 8 CHANNEL 4

C454 C480 C461 C462 C463 C481 C455 C456 C457 C458 C459 C460

1K 680PF

R259 400 R621Ω R2.4K R2.7K R31.3K R2.2K

0.1UF 0.01UF 0.4UF

+5VA +5VD AGND

REFDES-UX15 ADB042AR

SCA_REF15 SCA15P SCA15M

VIABIAS NC2 RBIAS BIASIN VCOM VREF VCOMOUT FBIAS OUTM OUTP GOM GOP G1M G1P PARITY PARITYAGND

VSS5P5 VSS5P4 VSS4* VSS5W1 VSS5W2 VSS5P3 VSS5G2 VSS5R1 VSS5R3 VSS5R2 VSS5G3 VSS5G1 VSS5R4 VSS5G4 VSS3* VSS5G5 VSS5R5 VSS2* VSS5D0 VSS5D1 VSS5P0 VSS5D VSS5R0 VSS5R1 VSS1* VSS5P1 VSS5G0 VSS5R6 NC

ROP ROM SOP SOM RCLKP RCLKM WA7M WA7P WA6M WA6P WA5M WA5P WA4M WA4P WA3M WA3P WA2M WA2P WA1M WA1P WA0M WA0P WCLKM WCLKP

IN1L IN1S IN1M IN1H GND3 IN2H IN2M IN2S IN2L GND2 IN3L IN3S IN3M IN3H GND1 IN4H IN4M IN4S IN4L MUDN

VDDA25_1 VDDA25_2 VDDP_2 VDDA_6 VDDA_7 VDDA_8 VSSDWK2 VDDDWK1 VDDDWK2 VDDA_8 VDDA_8 NC21

C468 C467 C466 C465 C469 C477 C478 C479 C464 C476

C470 C472 C571 C473 C471 C474

SACHIN SHRIRANG JOKHAKAR 10.2002 UPTON, N.Y. 11973

PROPRIETARY AND CONFIDENTIAL

TITLE: SMII SCHEMATIC

ID-1xxxx

SHEET: 20 OF 39

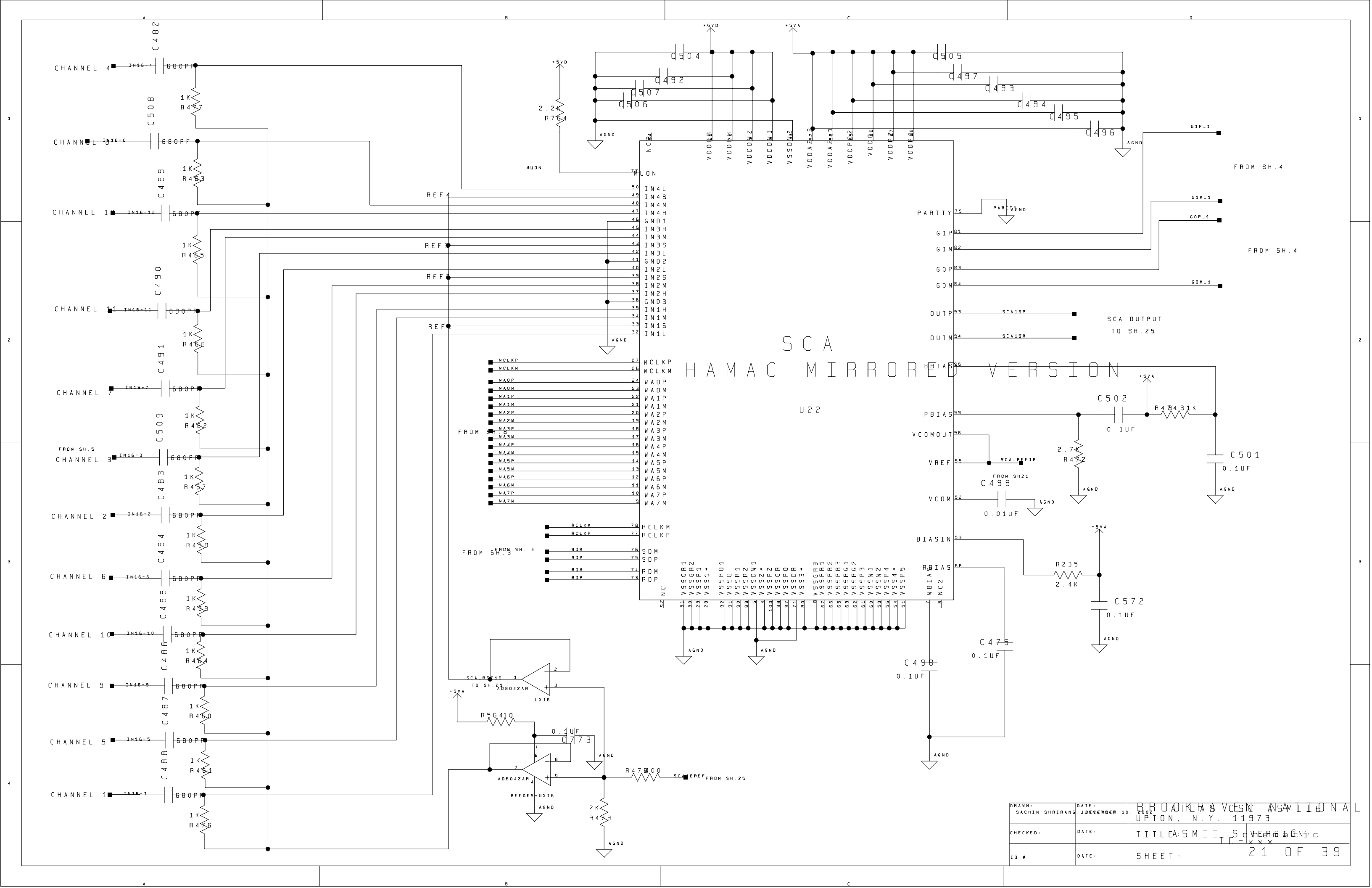
SCA
HAMAC MIRRORED VERSION
U22
CHANNEL 4
CHANNEL 8
CHANNEL 12
CHANNEL 11
CHANNEL 7
CHANNEL 3
CHANNEL 2
CHANNEL 6
CHANNEL 10
CHANNEL 9
CHANNEL 5
CHANNEL 1
FROM SH.5
FROM SH.4
FROM SH.3
FROM SH.21
FROM SH.25
SCA OUTPUT
TO SH.25
SCA_REF16
SCA_REF16
TO SH.21
SCA_REF16
FROM SH.25
MUON
REF4
REF3
REF2
REF1
PARITY
G1P
G1M
GOP
GOM
OUTP
OUTM
PBIAS
VCOMOUT
VREF
VCOM
BIASIN
RBIAS
C482
C508
C489
C490
C491
C509
C483
C484
C485
C486
C487
C488
C504
C492
C507
C506
C505
C497
C493
C494
C495
C496
C502
C501
C499
C572
C475
C498
C773
R235
2.4K
R56410
R47800
R479
2K
R764
2.2K
R431K
R472
2.7K
0.1UF
0.01UF
AGND
+5VD
+5VA
ADB042AR
UX16
REFDES=UX16
DRAWN: SACHIN SHRIRANG
DATE: DECEMBER 10, 2002
CHECKED:
DATE:
IQ #:
DATE:
BROOKHAVEN NATIONAL
UPTON, N.Y. 11973
TITLE: ASMII Schematic
SHEET: 21 OF 39

SCA DIFFERENCE AMPLIFIER AND ADC REFERENCE

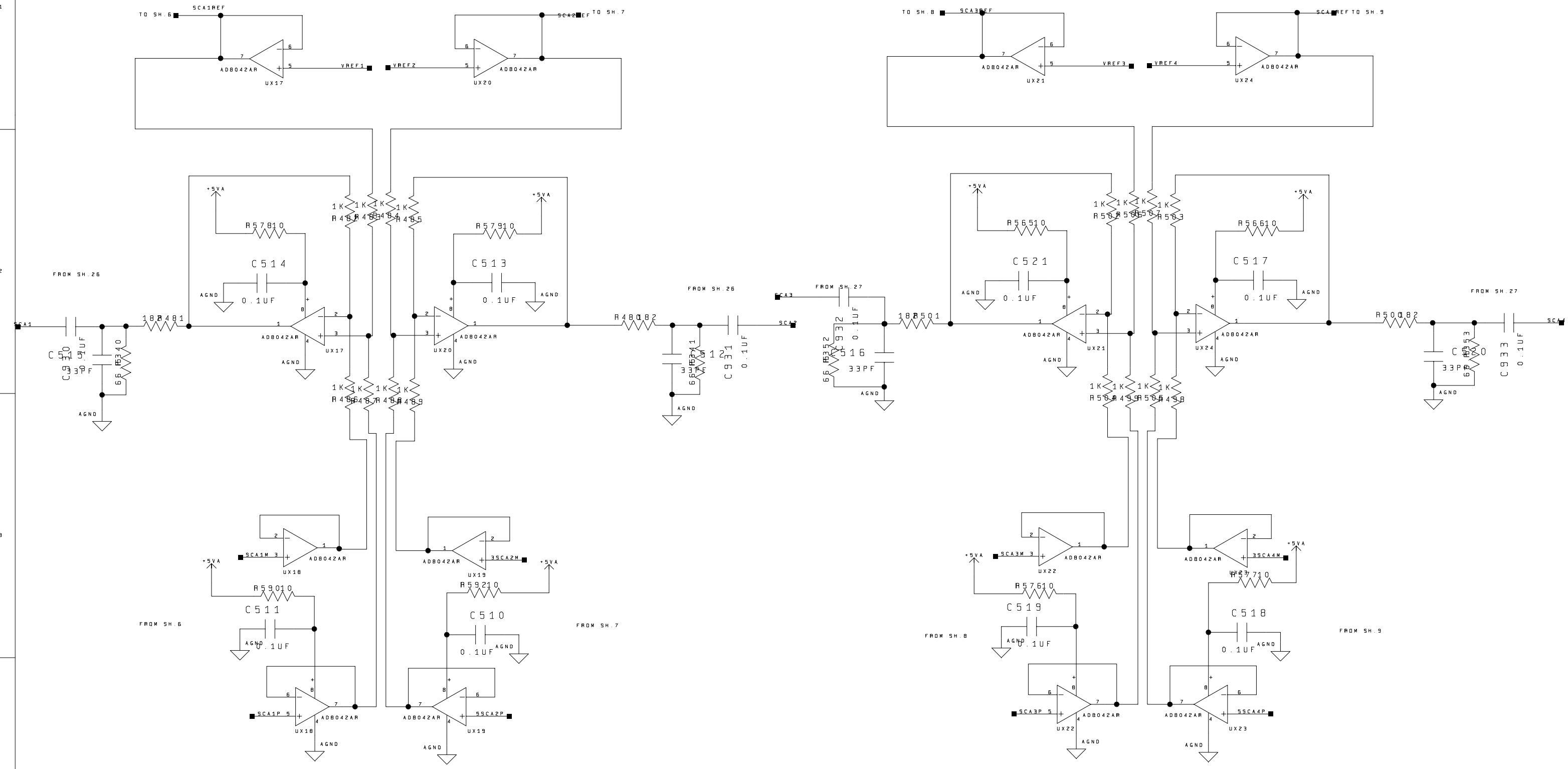

DRAWN: SACHIN SHRIRANG	DATE: DECEMBER 10, 2002	BROOKHAVEN NATIONAL LABORATORY UPTON, NY 11973
CHECKED:	DATE:	TITLE: ASMII SCHEMATIC
ID #: IO-xxx	DATE:	SHEET: 22 OF 39

SCSC ASMIIb

SCA DIFFERENCE AMPLIFIER AND ADC REFERENCE

DRAWN: SACHIN SHRIRANG	DATE: DECEMBER 10, 2002	BROOKHAVEN NATIONAL LABORATORY UPTON, N.Y. 11973
CHECKED:	DATE:	TITLE: SMII SCA ELECTRONICS
ID #:	DATE:	SHEET: 23 OF 39

SCA DIFFERENCE AMPLIFIER AND ADC REFERENCE

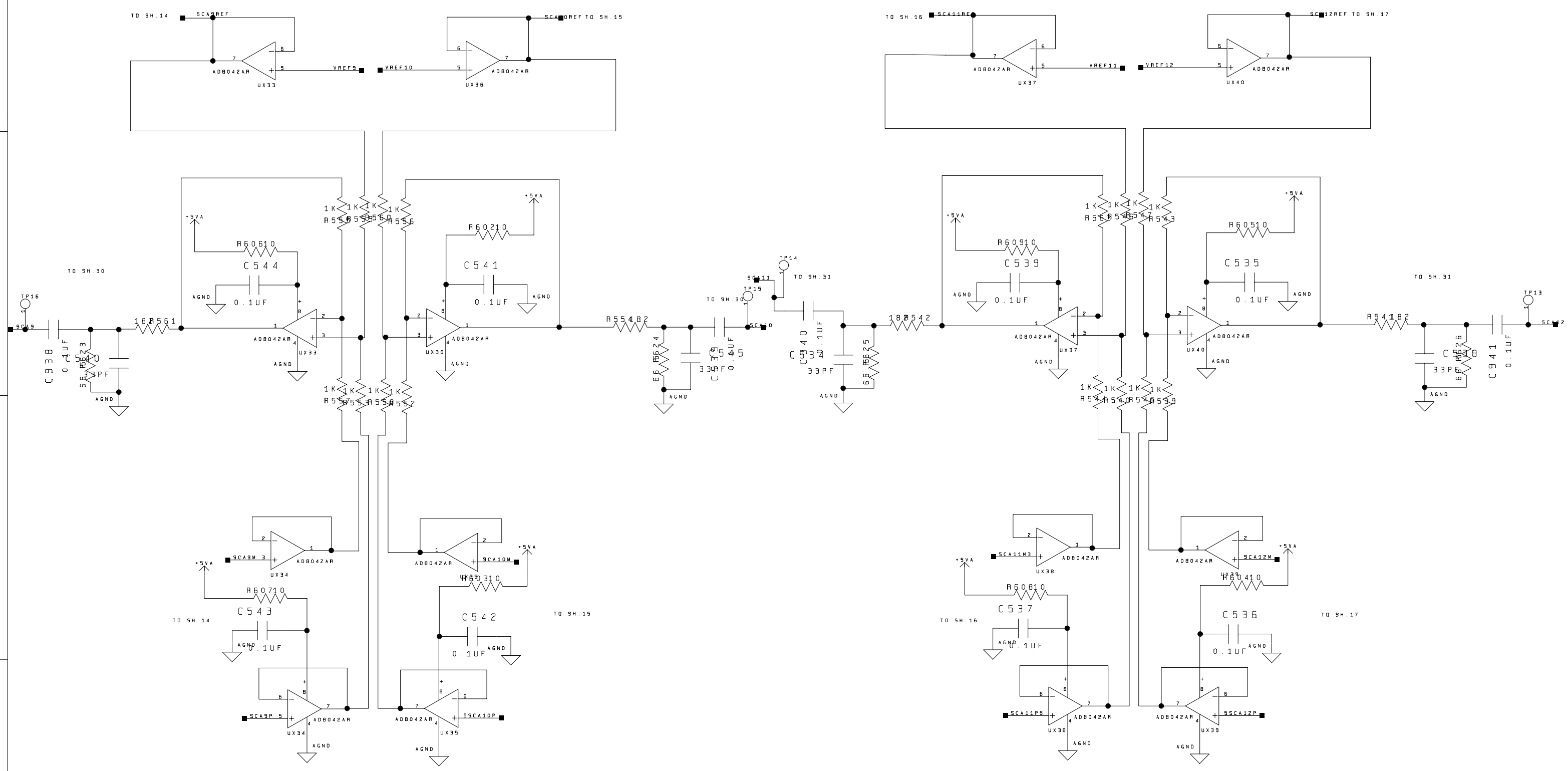

DRAWN: SACHIN SHRIRANG	DATE: DECEMBER 10, 2002	BROOKHAVEN NATIONAL LABORATORY UPTON, N.Y. 11973
CHECKED:	DATE:	TITLE: ASMII Schematic
IQ #:	DATE:	SHEET: 24 OF 39

SCA DIFFERENCE AMPLIFIER AND ADC REFERENCE

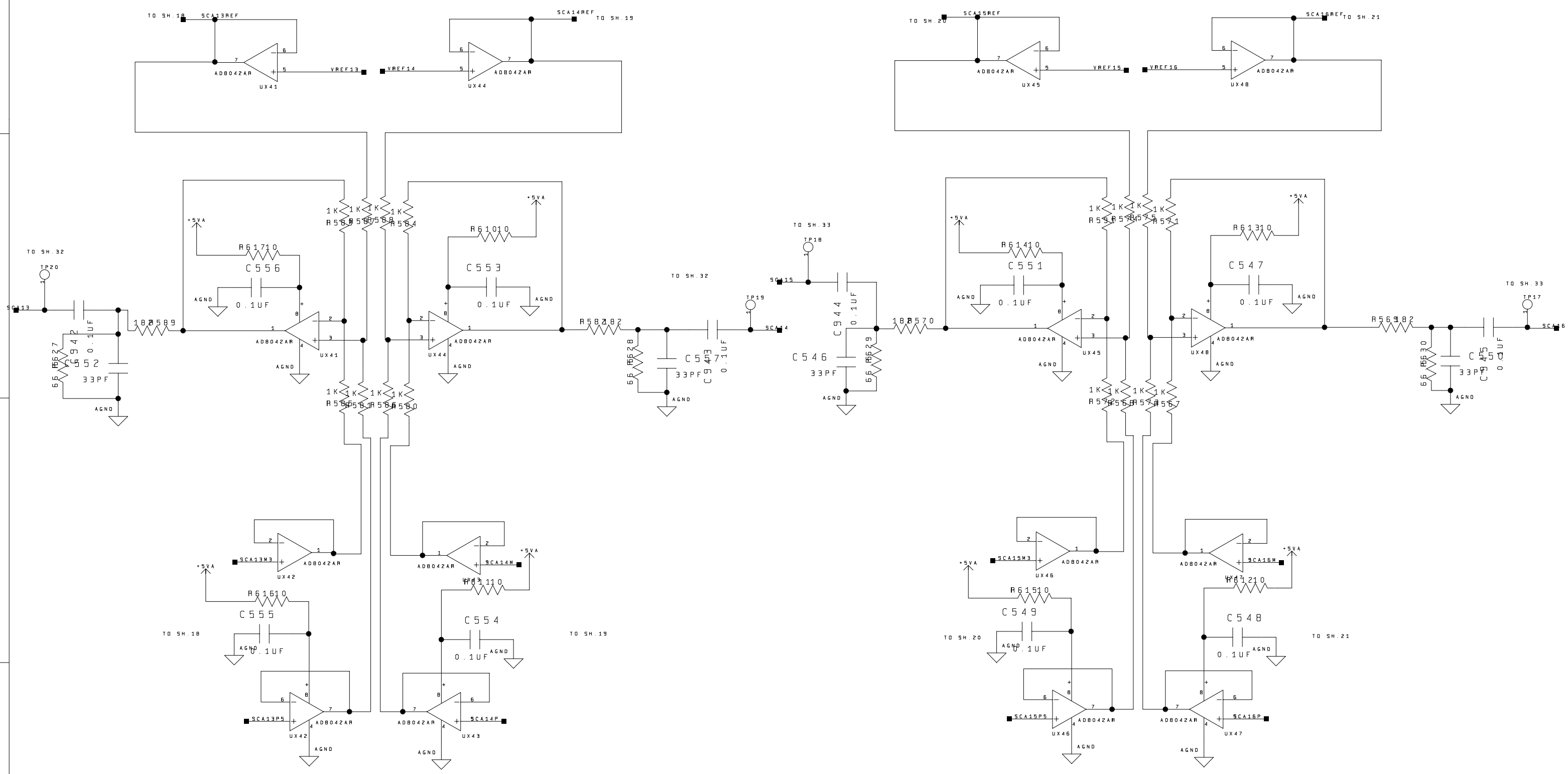

DRAWN: SACHIN SHRIRANG	DATE: DECEMBER 10, 2002	BROOKHAVEN NATIONAL LABORATORY UPTON, N.Y. 11973
CHECKED:	DATE:	TITLE: ASMII Schematic
ID #:	DATE:	SHEET: 25 OF 39

+5VA1 C581 0.1UF C580 0.1UF C567 0.1UF C576 0.1UF C578 0.1UF C579 0.1UF AGND

+5VA1 DVCC AVCC6 AVCC5 AVCC4 AVCC3 AVCC2 AVCC1 DVCC6 DVCC5 DVCC4 DVCC3 DVCC2 DVCC1

AD9042A U26

FROM SHEET 22 SCA1 AIN

D11~ D10 D9 D8 D7 D6 D5 D4 D3 D2 D1 D0 NC

ENCODE ENCODE~ DVOFFSET VREF AGND6 AGND5 AGND4 AGND3 AGND2 AGND1 DGND6 DGND7 DGND5 DGND4 DGND3 DGND2 DGND1

AGND

FROM SHEET 34

+5VA1 R255 1G ENCTOP

ENCTOP~ R2370 49.9 R573

If not PECL then donot populate 0 Ohm resistor, else donot populate RX and Cx.

C574 1F AGND

C7 0.01UF AGND C561 0.1UF AGND C8 0.01UF AGND

VREF1 TO SH. 22

RX 1.1K ADC Youth=4.1V

RA RB RC RD RE RF RG RH

RX41 1.1K

R2 / R1+R2 x 4.1V = 3.22 V (R2 = 3.3K, R1= 1.1K, I for bit 1=0)

DVCC C582 0.1UF C583 0.1UF C588 0.1UF C587 0.1UF C585 0.1UF C584 0.1UF AGND

ADC1.11 ADC1.10 ADC1.9 ADC1.8 ADC1.7 ADC1.6 ADC1.5 ADC1.4 ADC1.3 ADC1.2 ADC1.1 ADC1.0

SCA1 DATA TO G-LINK MUX 2's COMPLIMENT TO SH.36

+5VA1 C589 0.1UF C590 0.1UF C595 0.1UF C594 0.1UF C593 0.1UF C591 0.1UF AGND

+5VA1 DVCC AVCC6 AVCC5 AVCC4 AVCC3 AVCC2 AVCC1 DVCC6 DVCC5 DVCC4 DVCC3 DVCC2 DVCC1

AD9042A U25

FROM SHEET 22 SCA2 AIN

D11~ D10 D9 D8 D7 D6 D5 D4 D3 D2 D1 D0 NC

ENCODE ENCODE~ DVOFFSET VREF AGND6 AGND5 AGND4 AGND3 AGND2 AGND1 DGND6 DGND7 DGND5 DGND4 DGND3 DGND2 DGND1

AGND

FROM SHEET 34

+5VA1 R258 1G ENCTOP

ENCTOP~ R2570 49.9 R618

C575 1F AGND

C9 0.01UF AGND C565 0.1UF AGND C10 0.01UF AGND

VREF2 TO SH. 22

RX42 1.1K

RA RB RC RD RE RF RG RH

RX1 1.1K

DVCC C597 0.1UF C598 0.1UF C603 0.1UF C602 0.1UF C600 0.1UF C599 0.1UF AGND

ADC2.11 ADC2.10 ADC2.9 ADC2.8 ADC2.7 ADC2.6 ADC2.5 ADC2.4 ADC2.3 ADC2.2 ADC2.1 ADC2.0

SCA2 DATA TO G-LINK MUX 2's COMPLIMENT TO SH.36

DRAWN: SACHIN SHRIRANG	DATE: DECEMBER 10, 2002	BROOKHAVEN NATIONAL LABORATORY UPTON, N.Y. 11973
CHECKED:	DATE:	TITLE: ASMII Schematic
IO #:	DATE:	SHEET: 26 OF 39

IO-xxx

+5VA1
C613 0.1UF
C614 0.1UF
C619 0.1UF
C618 0.1UF
C617 0.1UF
C616 0.1UF
C615 0.1UF
AGND

DVCC
C627 0.1UF
C628 0.1UF
C634 0.1UF
C633 0.1UF
C631 0.1UF
C630 0.1UF
AGND

FROM SHEET 22
SCA3
7 AIN
U31 AD9042A
AVCC6 11
AVCC5 12
AVCC4 15
AVCC3 16
AVCC2 19
AVCC1 20
DVCC6 1
DVCC5 2
DVCC4 36
DVCC3 37
DVCC2 40
DVCC1 41
D11~ 44
D10 43
D9 42
D8 33
D7 32
D6 31
D5 30
D4 29
D3 28
D2 27
D1 26
D0 25
NC 23
3 ENCODE
4 ENCODE~
10 DC1
8 VOFFSET
9 VREF
13 AGND6
14 AGND5
17 AGND4
18 AGND3
21 AGND2
22 AGND1
5 DGND6
6 DGND7
24 DGND5
34 DGND4
35 DGND3
38 DGND2
39 DGND1
AGND

RX44 1.1K
RA 1 16
RB 2 15
RC 3 14
RD 4 13
RE 5 12
RF 6 11
RG 7 10
RH 8 9
1.1K
RX4

ADC3_11
ADC3_10
ADC3_9
ADC3_8
ADC3_7
ADC3_6
ADC3_5
ADC3_4
ADC3_3
ADC3_2
ADC3_1
ADC3_0

SCA3 DATA
TO G-LINK MUX
2's COMPLIMENT
TO SH.36

FROM SHEET 34
ENCTOP
ENCTOP~
R2600
R262 1G
49.9
R645
C604 1F
C11 0.01UF
C573 0.1UF
C12 0.01UF
AGND
VREF3
TO SH. 22

DVCC
C626 0.1UF
C625 0.1UF
C620 0.1UF
C621 0.1UF
C623 0.1UF
C624 0.1UF
C622 0.1UF
AGND

+5VA1
C612 0.1UF
C611 0.1UF
C606 0.1UF
C607 0.1UF
C608 0.1UF
C609 0.1UF
C610 0.1UF
AGND

FROM SHEET 22
SCA4
7 AIN
U30 AD9042A
AVCC6 11
AVCC5 12
AVCC4 15
AVCC3 16
AVCC2 19
AVCC1 20
DVCC6 1
DVCC5 2
DVCC4 36
DVCC3 37
DVCC2 40
DVCC1 41
D11~ 44
D10 43
D9 42
D8 33
D7 32
D6 31
D5 30
D4 29
D3 28
D2 27
D1 26
D0 25
NC 23
3 ENCODE
4 ENCODE~
10 DC1
8 VOFFSET
9 VREF
13 AGND6
14 AGND5
17 AGND4
18 AGND3
21 AGND2
22 AGND1
5 DGND6
6 DGND7
24 DGND5
34 DGND4
35 DGND3
38 DGND2
39 DGND1
AGND

RX45 1.1K
RA 1 16
RB 2 15
RC 3 14
RD 4 13
RE 5 12
RF 6 11
RG 7 10
RH 8 9
1.1K
RX5

ADC4_11
ADC4_10
ADC4_9
ADC4_8
ADC4_7
ADC4_6
ADC4_5
ADC4_4
ADC4_3
ADC4_2
ADC4_1
ADC4_0

SCA4 DATA
TO G-LINK MUX
2's COMPLIMENT
TO SH.36

FROM SHEET 34
ENCTOP
ENCTOP~
R2690
R271 1G
49.9
R672
C605 1F
C13 0.01UF
C577 0.1UF
C14 0.01UF
AGND
VREF4
TO SH. 22

DRAWN: SACHIN SHRIRANG JOSHI	DATE: DECEMBER 10, 2002	BROOKHAVEN NATIONAL LABORATORY UPTON, N.Y. 11973
CHECKED:	DATE:	TITLE: SMII Schematic
IO #:	DATE:	SHEET: 27 OF 39

IO-xxx

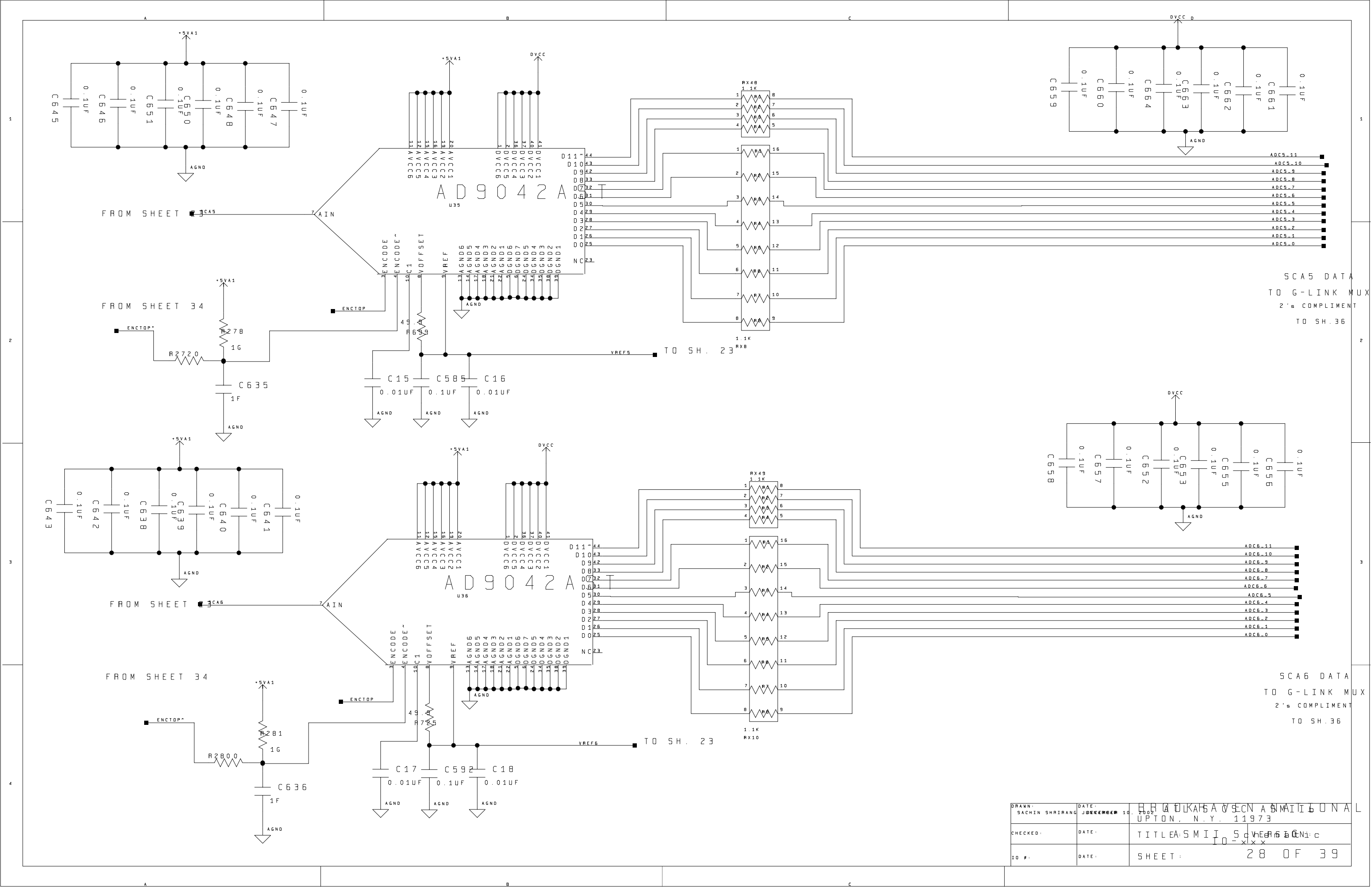

DRAWN: SACHIN SHRIRANG	DATE: DECEMBER 10, 2002	BROOKHAVEN NATIONAL LABORATORY ATLAS VS ASMII UPTON, N.Y. 11973
CHECKED:	DATE:	TITLE: ASMII Scheme Tic
ID #:	DATE:	SHEET: 28 OF 39

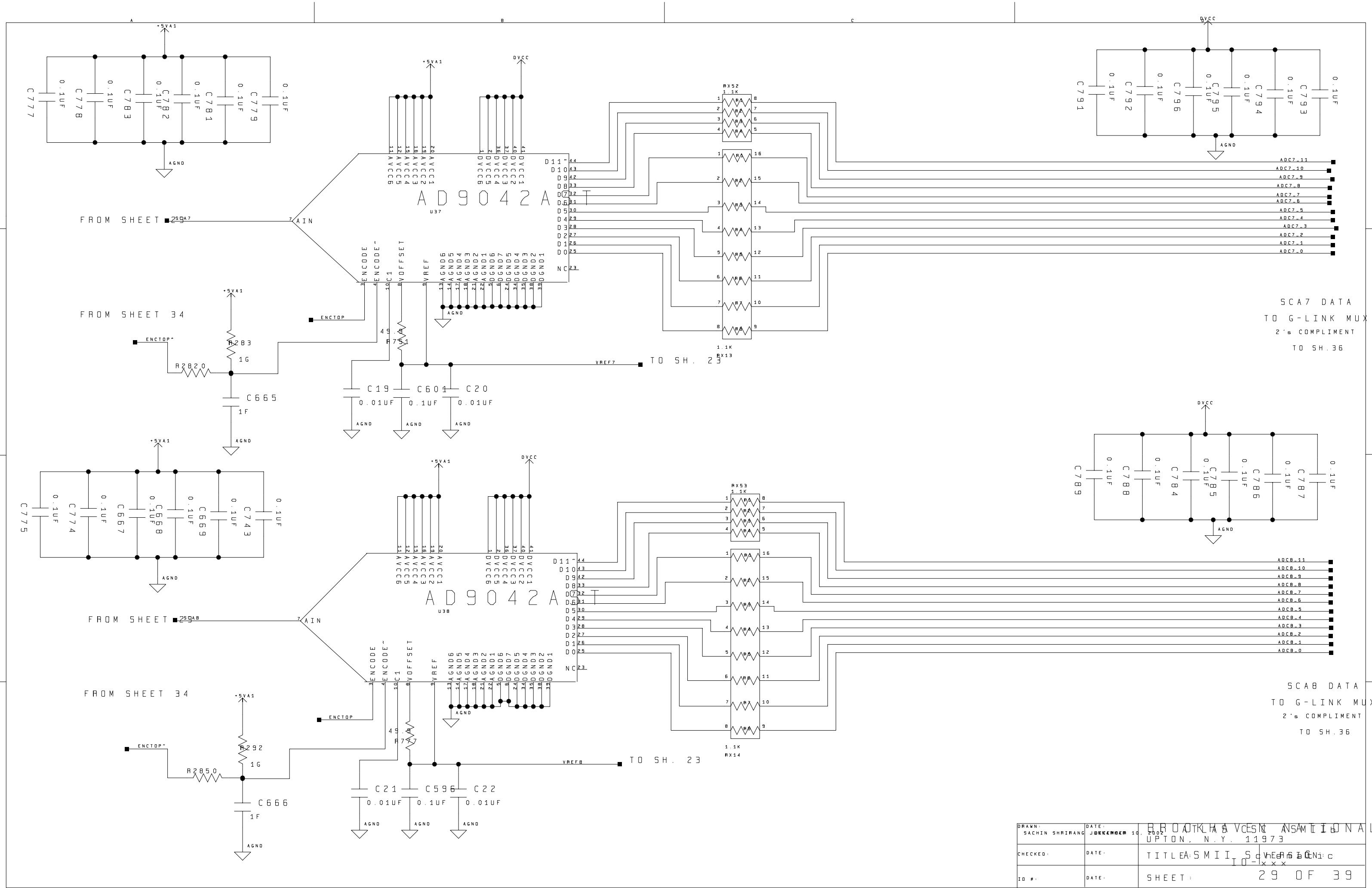

DRAWN: SACHIN SHRIRANG	DATE: DECEMBER 10, 2002	BROOKHAVEN NATIONAL LAB. UPTON, N.Y. 11973
CHECKED:	DATE:	TITLE: ASMII SCHEMATIC
ID #:	DATE:	SHEET: 29 OF 39

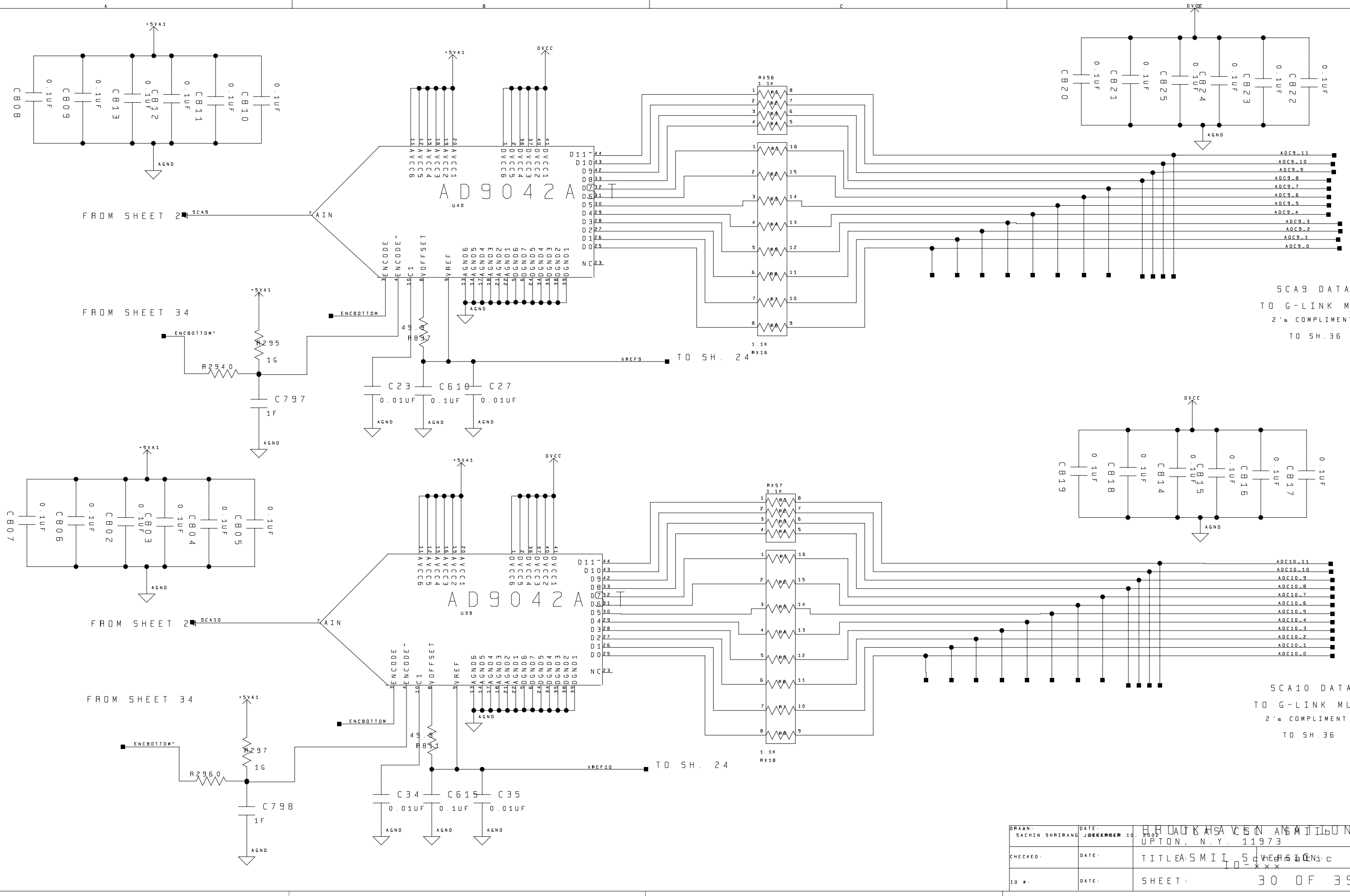

DRAWN: SACHIN SHRIRANG	DATE: DECEMBER 10, 2002	BROOKHAVEN NATIONAL LABORATORY, UPTON, N.Y. 11973
CHECKED:	DATE:	TITLE: ASMII Schematic
ID #:	DATE:	SHEET: 30 OF 39

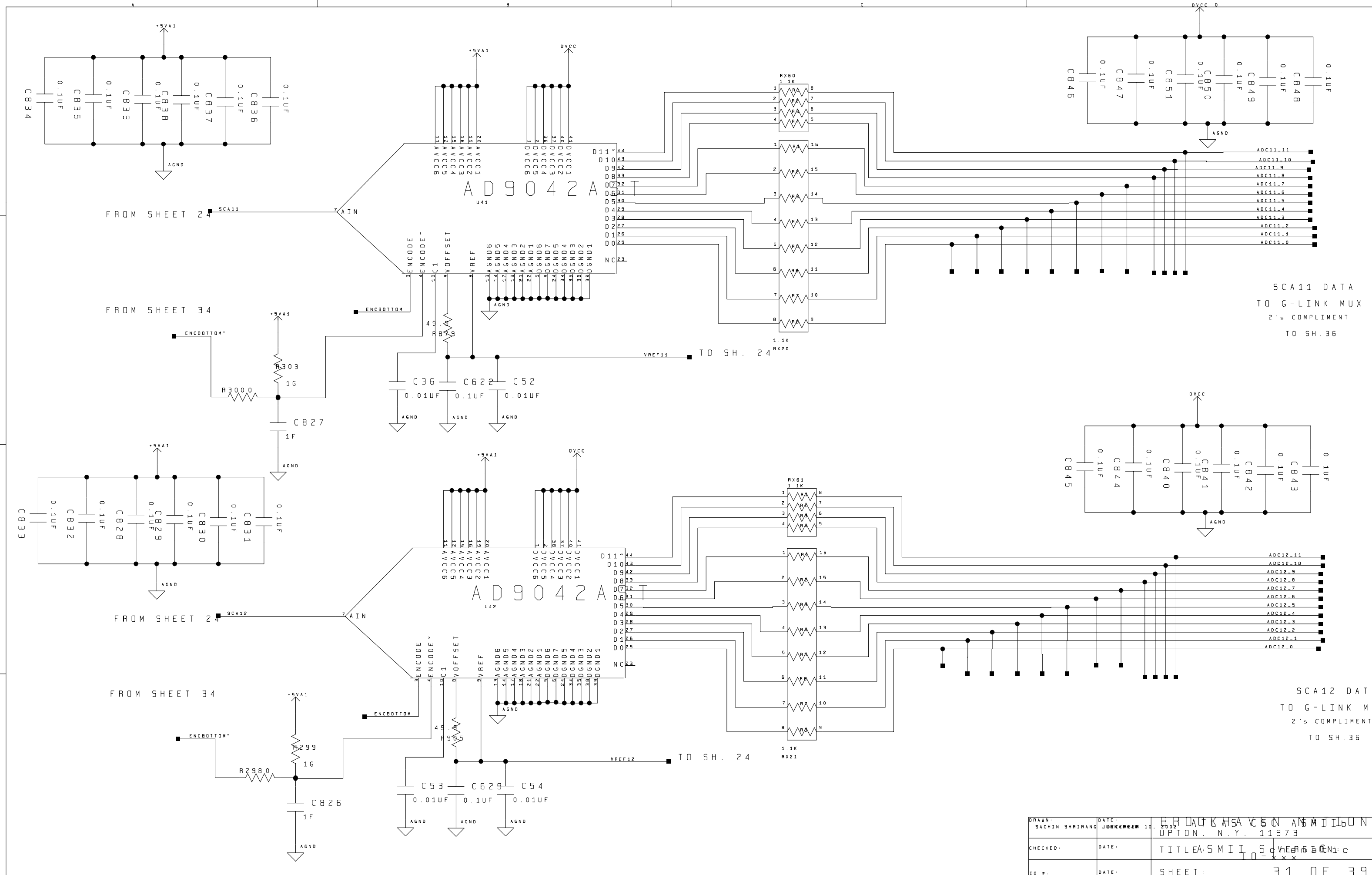

DRAWN: SACHIN SHRIRANG	DATE: DECEMBER 10, 2002	BROOKHAVEN NATIONAL ATLAS CSC ASMII UPTON, N.Y. 11973
CHECKED:	DATE:	TITLE: ASMII Schematic TO-xxx
ID #:	DATE:	SHEET: 31 OF 39

C866 C867 C871 C870 C869 C868 0.1UF
+5VA1
AGND
C852 C853 C857 C856 C855 C854 0.1UF
DVCC
AGND
U43 AD9042AT
AVCC6 AVCC5 AVCC4 AVCC3 AVCC2 AVCC1
DVCC6 DVCC5 DVCC4 DVCC3 DVCC2 DVCC1
D11~ D10 D9 D8 D7 D6 D5 D4 D3 D2 D1 D0 NC
AIN
FROM SHEET 25 SCA13
ENCODE ENCODE~ C1 VOFFSET VREF AGND6 AGND5 AGND4 AGND3 AGND2 AGND1 DGND6 DGND7 DGND5 DGND4 DGND3 DGND2 DGND1
RX64 1.1K
1.1K RX24
ADC13_11 ADC13_10 ADC13_9 ADC13_8 ADC13_7 ADC13_6 ADC13_5 ADC13_4 ADC13_3 ADC13_2 ADC13_1 ADC13_0
SCA13 DATA
TO G-LINK MUX
2's COMPLIMENT
TO SH.36
FROM SHEET 34
ENCBOTTOM ENCBOTTOM~
R330 1G
R3290
C859 1F
49.9 R967
VREF13
TO SH. 25
C55 0.01UF C637 0.1UF C56 0.01UF
C865 C864 C860 C861 C862 C863 0.1UF
U44 AD9042AT
FROM SHEET 25 SCA14
RX65 1.1K
1.1K RX25
ADC14_11 ADC14_10 ADC14_9 ADC14_8 ADC14_7 ADC14_6 ADC14_5 ADC14_4 ADC14_3 ADC14_2 ADC14_1 ADC14_0
SCA14 DATA
TO G-LINK MUX
2's COMPLIMENT
TO SH.36
FROM SHEET 34
R318 1G
R3050
C858 1F
49.9 R953
VREF14
TO SH. 25
C59 0.01UF C632 0.1UF C148 0.01UF
C877 C876 C872 C873 C874 C875 0.1UF

DRAWN: SACHIN SHRIRANG	DATE: DECEMBER 10, 2002	BROOKHAVEN NATIONAL LABORATORY UPTON, N.Y. 11973
CHECKED:	DATE:	TITLE: SMIL Schematic
IO #:	DATE:	SHEET: 32 OF 39

IO-xxx

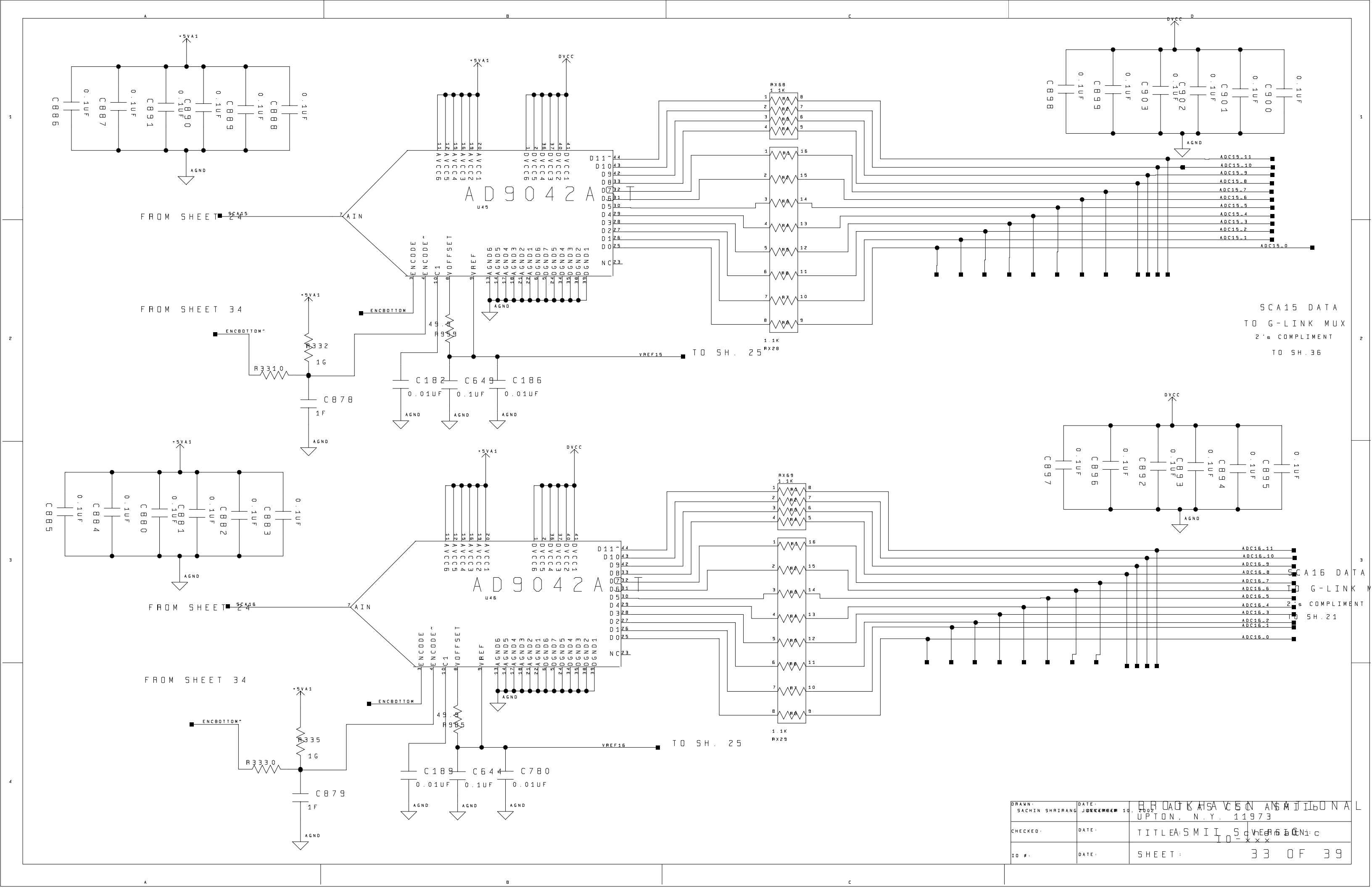

AD9042A
U45
U46
FROM SHEET 24
FROM SHEET 34
SCA15
SCA16
AIN
ENCBOTTOM
ENCBOTTOM~
VREF15
VREF16
TO SH. 25
TO SH. 21
SCA15 DATA
TO G-LINK MUX
2's COMPLIMENT
TO SH.36
SCA16 DATA
TO G-LINK M
2's COMPLIMENT
TO SH.21
RX68
RX28
RX69
RX29
1.1K
DVCC
AGND
+5VA1
C886
C887
C891
C890
C889
C888
C898
C899
C903
C902
C901
C900
C885
C884
C880
C881
C882
C883
C897
C896
C892
C893
C894
C895
C182
C649
C186
C189
C644
C780
C878
C879
R332
R3310
R3330
R335
R959
R985
0.1UF
0.01UF
1G
1F
49.9
ADC15_11
ADC15_10
ADC15_9
ADC15_8
ADC15_7
ADC15_6
ADC15_5
ADC15_4
ADC15_3
ADC15_2
ADC15_1
ADC15_0
ADC16_11
ADC16_10
ADC16_9
ADC16_8
ADC16_7
ADC16_6
ADC16_5
ADC16_4
ADC16_3
ADC16_2
ADC16_1
ADC16_0
DRAWN: SACHIN SHRIRANG
DATE: DECEMBER 10, 2002
CHECKED:
DATE:
ID #:
DATE:
BROOKHAVEN NATIONAL
UPTON, N.Y. 11973
TITLE: ASMII SCHEMATIC
SHEET: 33 OF 39

ADC CLOCK DRIVER

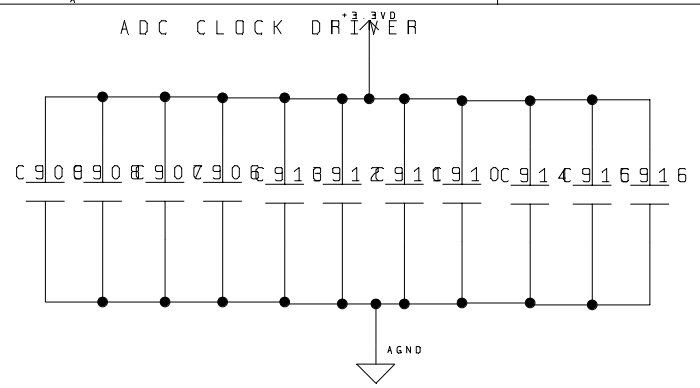

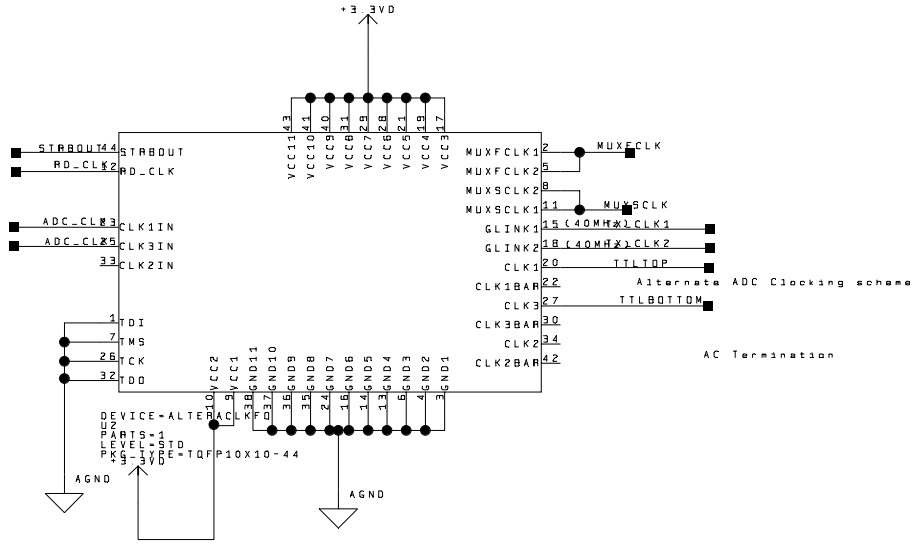

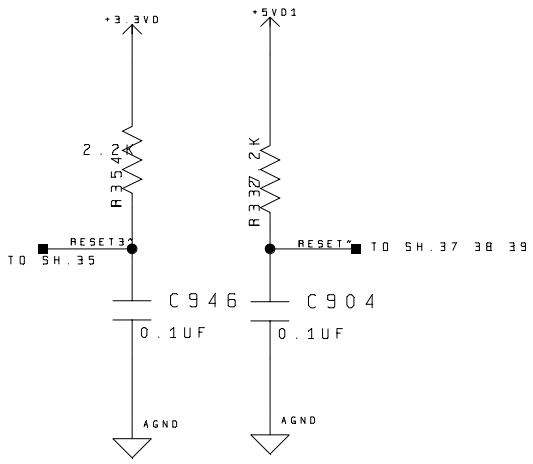

Only one of these two will be mounted

DRAWN: SACHIN SHRIRANG	DATE: DECEMBER 10, 2002	BROOKHAVEN NATIONAL UPTON, N.Y. 11973
CHECKED:	DATE:	TITLE: SMII Schematic
ID #:	DATE:	SHEET: 34 OF 39

IO-xxx

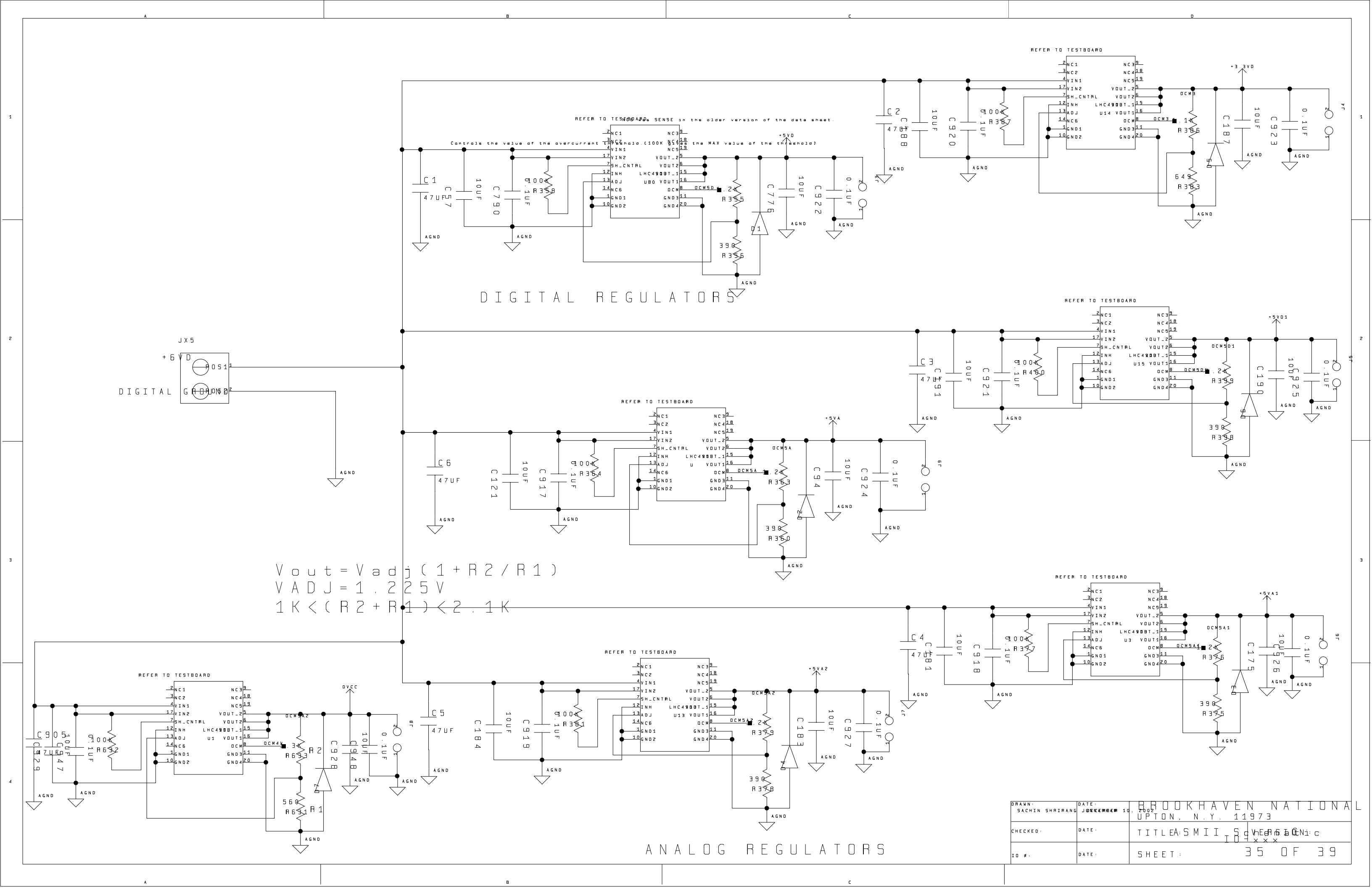

DRAWN: SACHIN SHRIRANG	DATE: DECEMBER 10, 2002	BROOKHAVEN NATIONAL UPTON, N.Y. 11973
CHECKED:	DATE:	TITLE: ASMII Schematic ID: xxx
ID #:	DATE:	SHEET: 35 OF 39

G-LINK MULTIPLEXOR

Required to be RAD-HAR

4 pack resistors for impedance matching. Put them near the

MULTIPLEX 16 12-BIT ADC OUTPUTS INTO 2- 16-BIT G-LINK DATA FRAMES

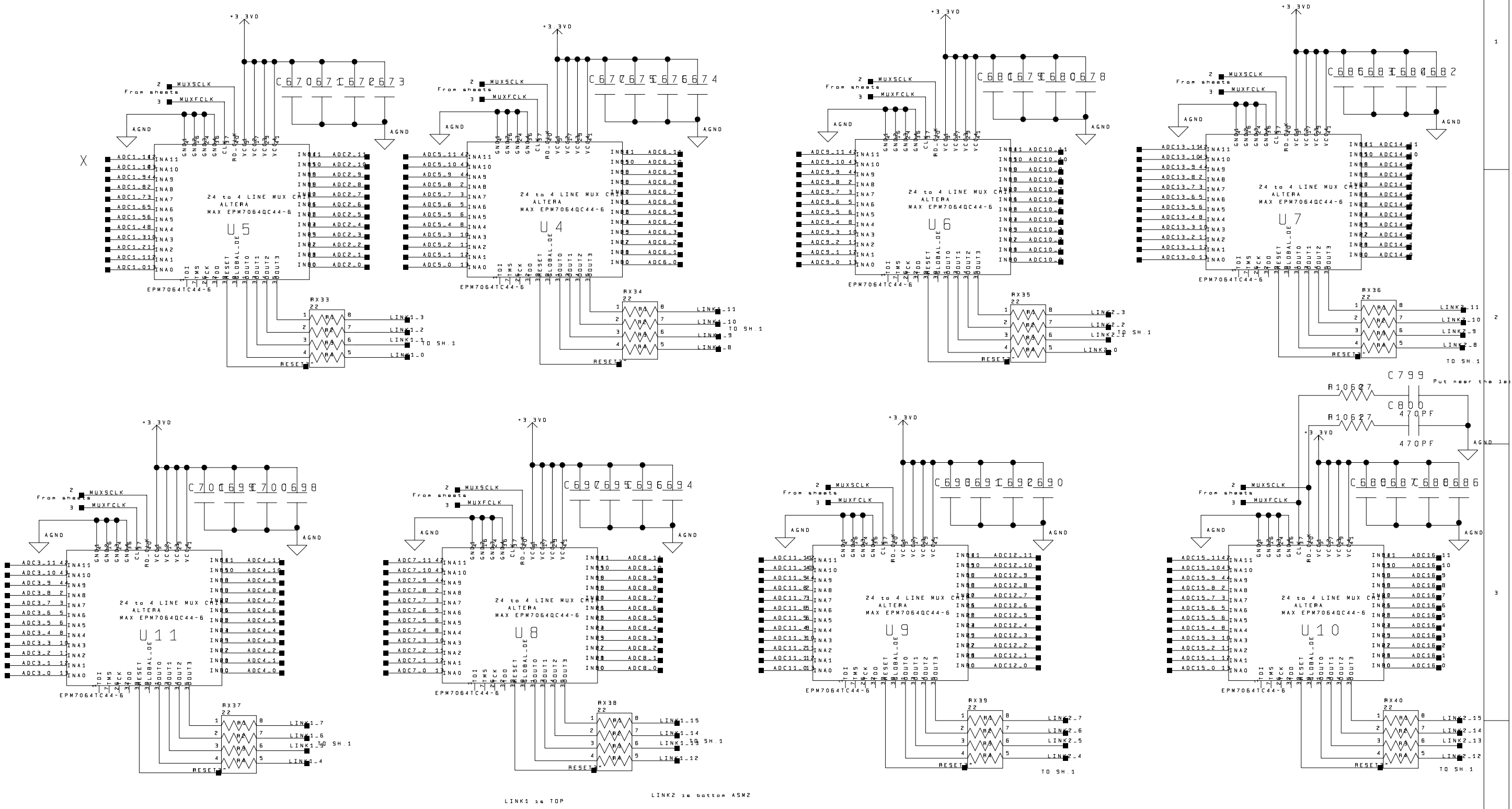

Inputs to these muxes come from SH 26 through 33 in that order

RESISTOR DIVIDER USED IN FRONT OF THE ADCS TO INTERFACE 5V ADC O/P TO 3.3V ALTERACHP/DMILL in th

DRAWN: SACHIN SHRIRANG	DATE: DECEMBER 10, 2002	BROOKHAVEN NATIONAL UPTON, N.Y. 11973
CHECKED:	DATE:	TITLE: ASMII Schematic
ID #:	DATE:	SHEET: 36 OF 39

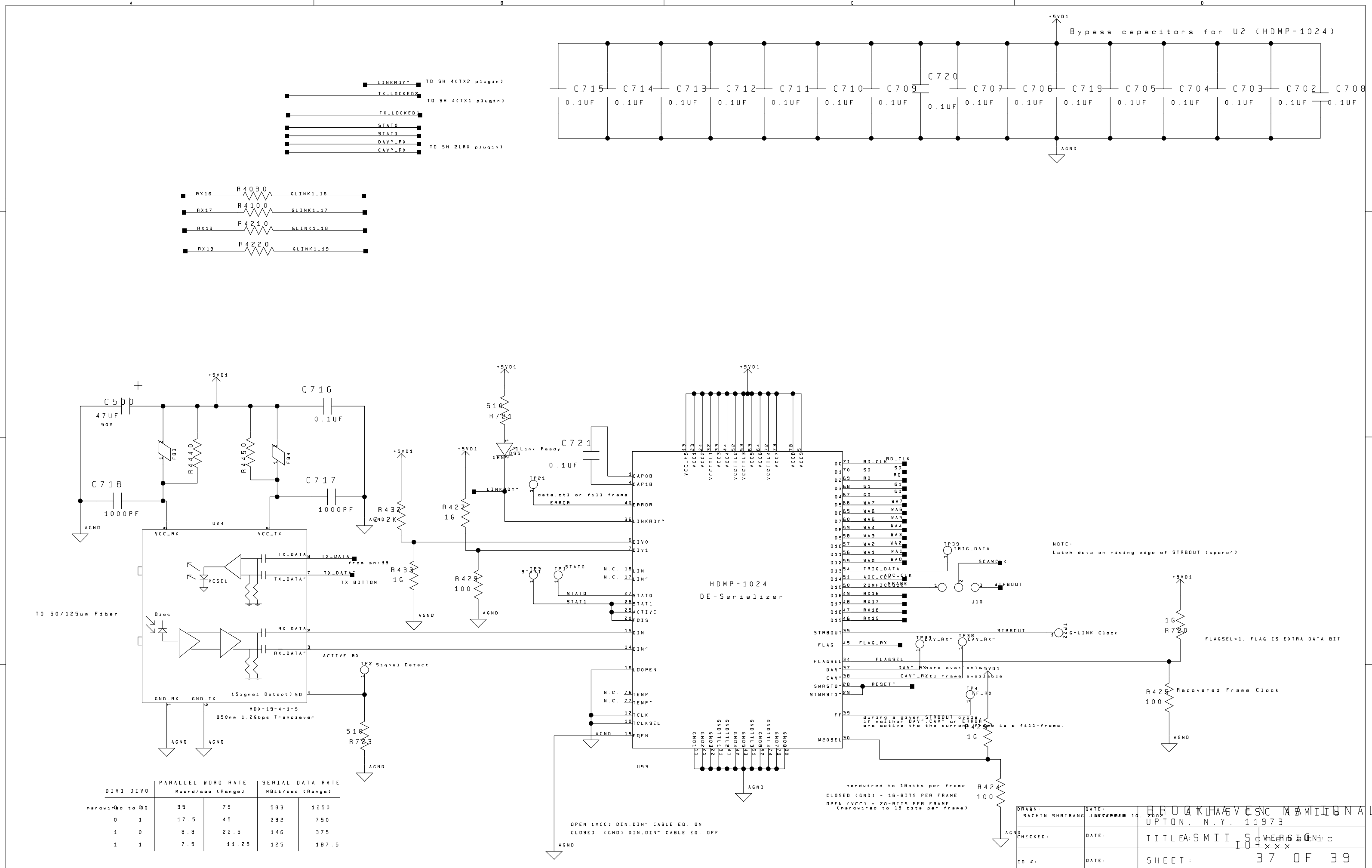

DIV1	DIV0	PARALLEL WORD RATE Mword/sec (Range)		SERIAL DATA RATE MBit/sec (Range)	
hardwired to 0	0	35	75	583	1250
0	1	17.5	45	292	750
1	0	8.8	22.5	146	375
1	1	7.5	11.25	125	187.5

DRAWN: SACHIN SHRIRANG	DATE: DECEMBER 10, 2002	BROOKHAVEN NATIONAL LABORATORY UPTON, N.Y. 11973
CHECKED:	DATE:	TITLE: ASMII_SCHEMATIC
ID #:	DATE:	SHEET: 37 OF 39

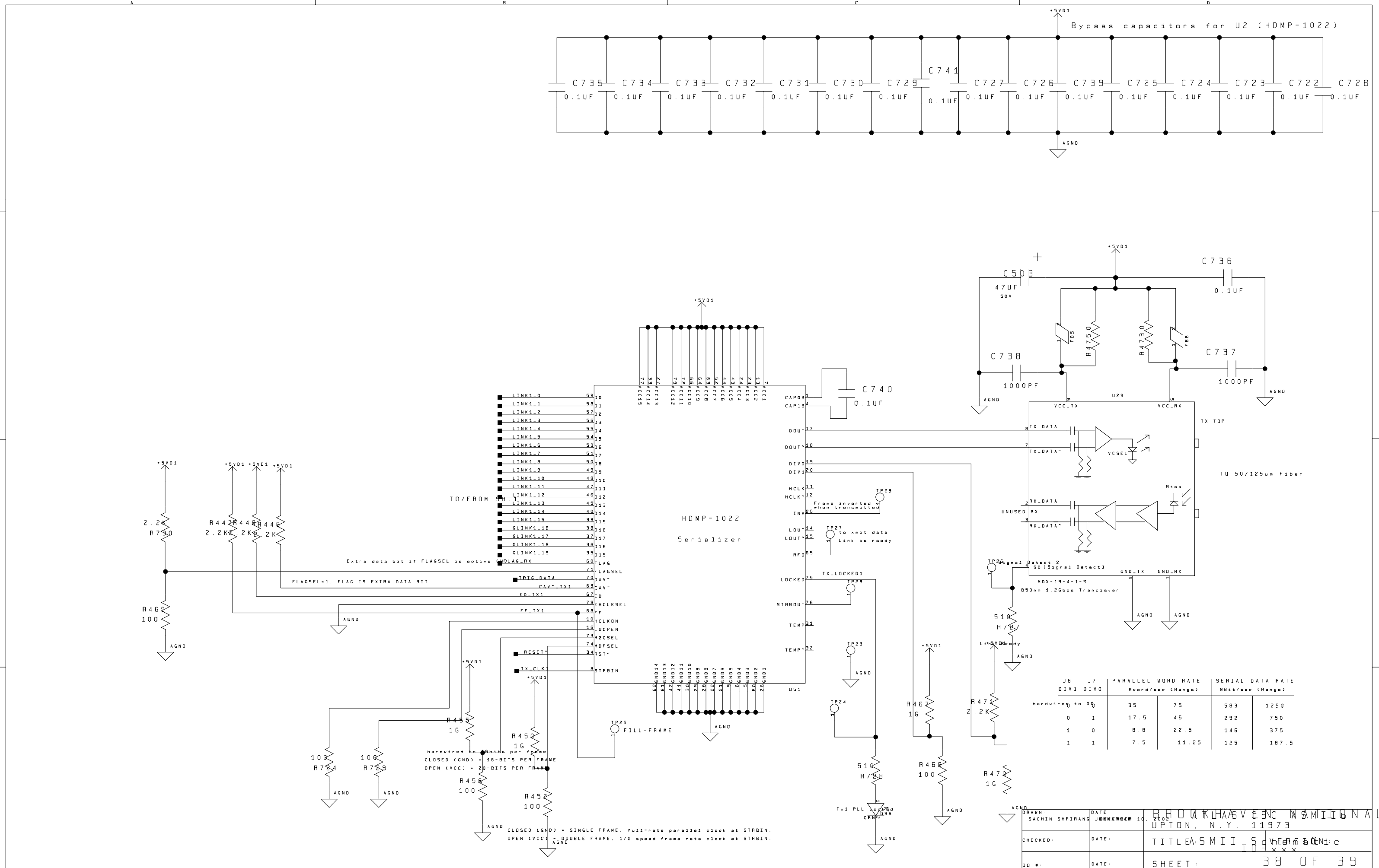

J6 DIV1	J7 DIV0	PARALLEL WORD RATE Mword/sec (Range)		SERIAL DATA RATE MBit/sec (Range)	
hardwired to 00					
0	0	35	75	583	1250
0	1	17.5	45	292	750
1	0	8.8	22.5	146	375
1	1	7.5	11.25	125	187.5

DRAWN: SACHIN SHRIRANG	DATE: DECEMBER 10, 2002	BROOKHAVEN NATIONAL LABORATORY UPTON, N.Y. 11973
CHECKED:	DATE:	TITLE: ASMII SCHEMATIC
ID #:	DATE:	SHEET: 38 OF 39

Bypass capacitors for U2 (HDMP-1022)

+5VD1

C750 0.1UF
C749 0.1UF
C748 0.1UF
C747 0.1UF
C746 0.1UF
C745 0.1UF
C744 0.1UF
C756 0.1UF
C742 0.1UF
C761 0.1UF
C754 0.1UF
C760 0.1UF
C759 0.1UF
C758 0.1UF
C757 0.1UF
C801 0.1UF

AGND

+5VD1

C755 0.1UF

LINK2_0 LINK2_1 LINK2_2 LINK2_3 LINK2_4 LINK2_5 LINK2_6 LINK2_7 LINK2_8 LINK2_9 LINK2_10 LINK2_11 LINK2_12 LINK2_13 LINK2_14 LINK2_15 GLINK1_16 GLINK1_17 GLINK1_18 GLINK1_19

TO/FROM U1

Extra data bit if FLAGSEL is active

FLAG_RX

FLAGSEL=1. FLAG IS EXTRA DATA BIT

TRIG_DATA
CAV^_TX2
ED_TX2
FF_TX2
RESET^
TX_CLK2

FLAG
FLAGSEL
CAV^
CAV^
ED
EHCLKSEL
FF
HCLKON
LOOPEN
M20SEL
MDFSEL
RST^
STRBIN

HDMP-1022

Serializer

U52

CAP0B CAP1B
DOUT DOUT^
DIV0 DIV1
HCLK HCLK^
INV
LOUT LOUT^
RFD
LOCKED
STRBOUT
TEMP TEMP^

TX_DATA
TX_DATA^

to Sheet 37

TP36 Frame inverted when transmitted
TP34 to xmit data Link is ready
TX_LOCKED2
TP35
TP30
TP31
TP32 FILL-FRAME

R493 2.2K
R490 2.2K
R491 2.2K
R492 2.2K
R508 1G
R494 1G
R496 1G
R732 100
R736 100
R495 100
R497 100
R510 1G
R520 100
R509 2.2K
R521 1G
R735 510

hardwired to 16bits per frame
CLOSED (GND) = 16-BITS PER FRAME
OPEN (VCC) = 20-BITS PER FRAME

CLOSED (GND) = SINGLE FRAME, full-rate parallel clock at STRBIN (I am using single frame mode)
OPEN (VCC) = DOUBLE FRAME, 1/2 speed frame rate clock at STRBIN.

J6 DIV1	J7 DIV0	PARALLEL WORD RATE Mword/sec (Range)		SERIAL DATA RATE MBit/sec (Range)	
hardwired to 00					
0	0	35	75	583	1250
0	1	17.5	45	292	750
1	0	8.8	22.5	146	375
1	1	7.5	11.25	125	187.5

DRAWN: SACHIN SHRIRANG	DATE: DECEMBER 10, 2002	BROOKHAVEN NATIONAL LABORATORY UPTON, N.Y. 11973
CHECKED:	DATE:	TITLE: ASMII Schematic IO_xxx
IO #:	DATE:	SHEET: 39 OF 39