Atlas CSC ASMII

Kurt Vetter

Brookhaven National Laboratory

Presented at BNL

August 7, 2000

Topics

1. Introduction and key facts
2. Design Details
3. Optical Links
4. Radiation

ATLAS CSC with Electronics

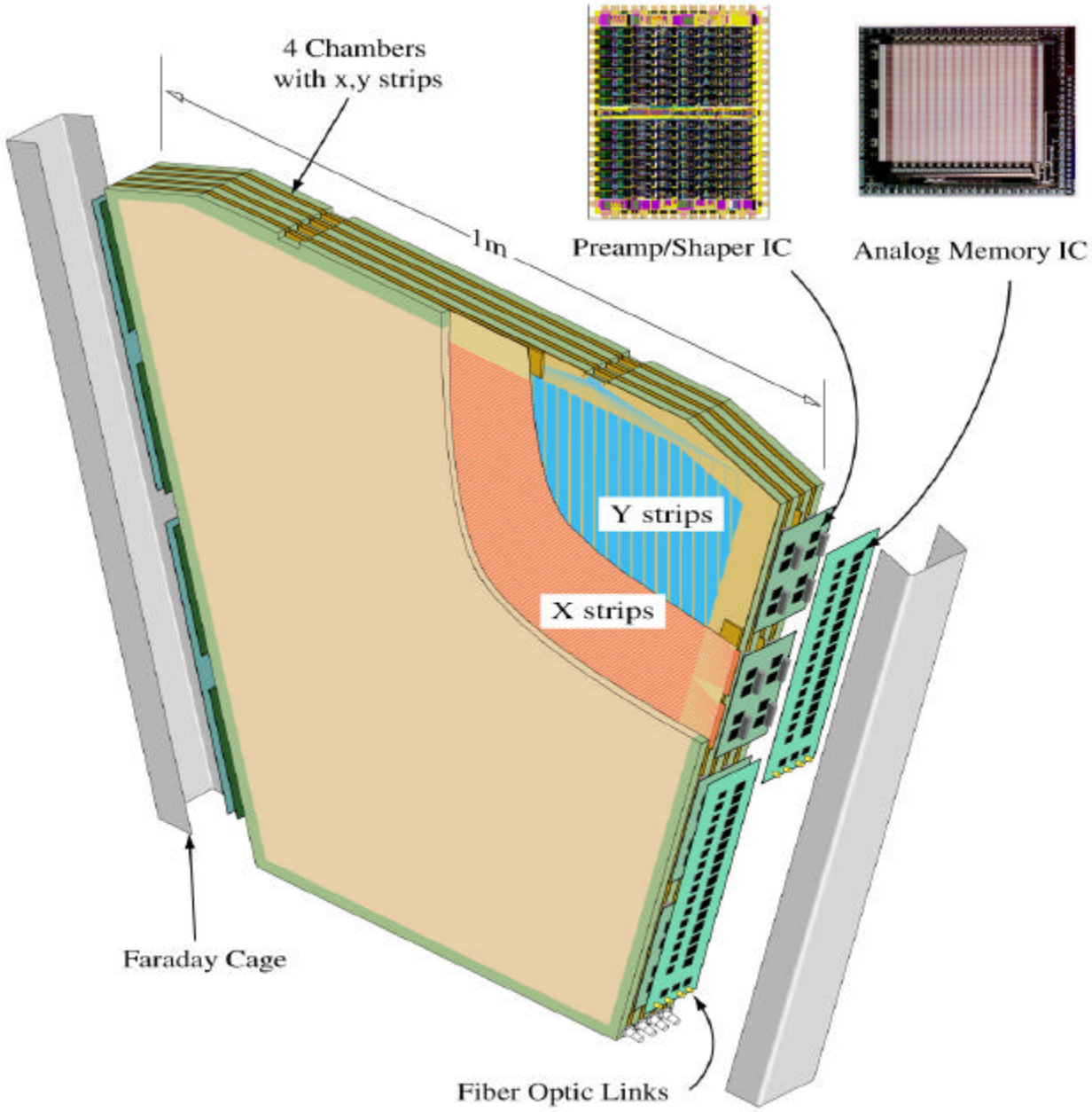

ASMII FACTS

- 5 per chamber
- 4 x-strip (2 per side)
- 1 y-strip
- 320 per system (256 x-strip, 64 y-strip)
- Total Material Cost $629,650
- $2,000 per ASMII
- 192 Channels per ASMII

KEY MILESTONES

- Preliminary Design Review (PDR) – August 2000
- Beam Test – September 2000
- ASMII/Sparsifier Integration – April 2002
- ASMII Final Design Review (FDR) – March 2003
- Production Readiness Review (PRR) – July 2003
- ASMII production begins – August 2003
- ASMII fabrication complete – February 2004
- ASMII installation – April 2004

ASMII Design Evolution

Design Objectives

- Develop SCA Controller
- Test SCA (muon mode)
- Preamp/SCA interface
- Remote SCA control
- Characterize ADC
- Evaluate Noise
- Beam Test Electronics

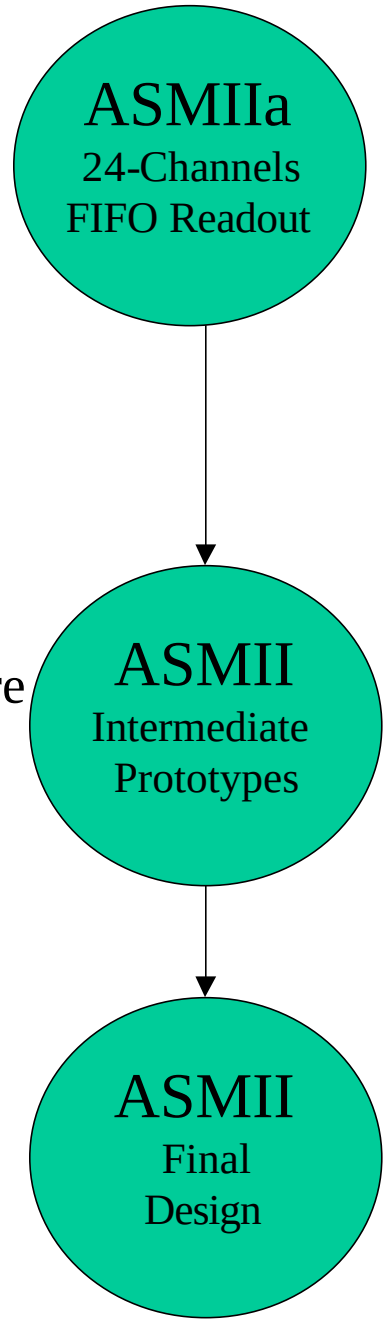

Design Objectives

- 192 Channels
- Develop Readout Architecture
- Develop Optical Link's
- Characterize Noise
- Calibration circuitry

ASMII Block Diagram

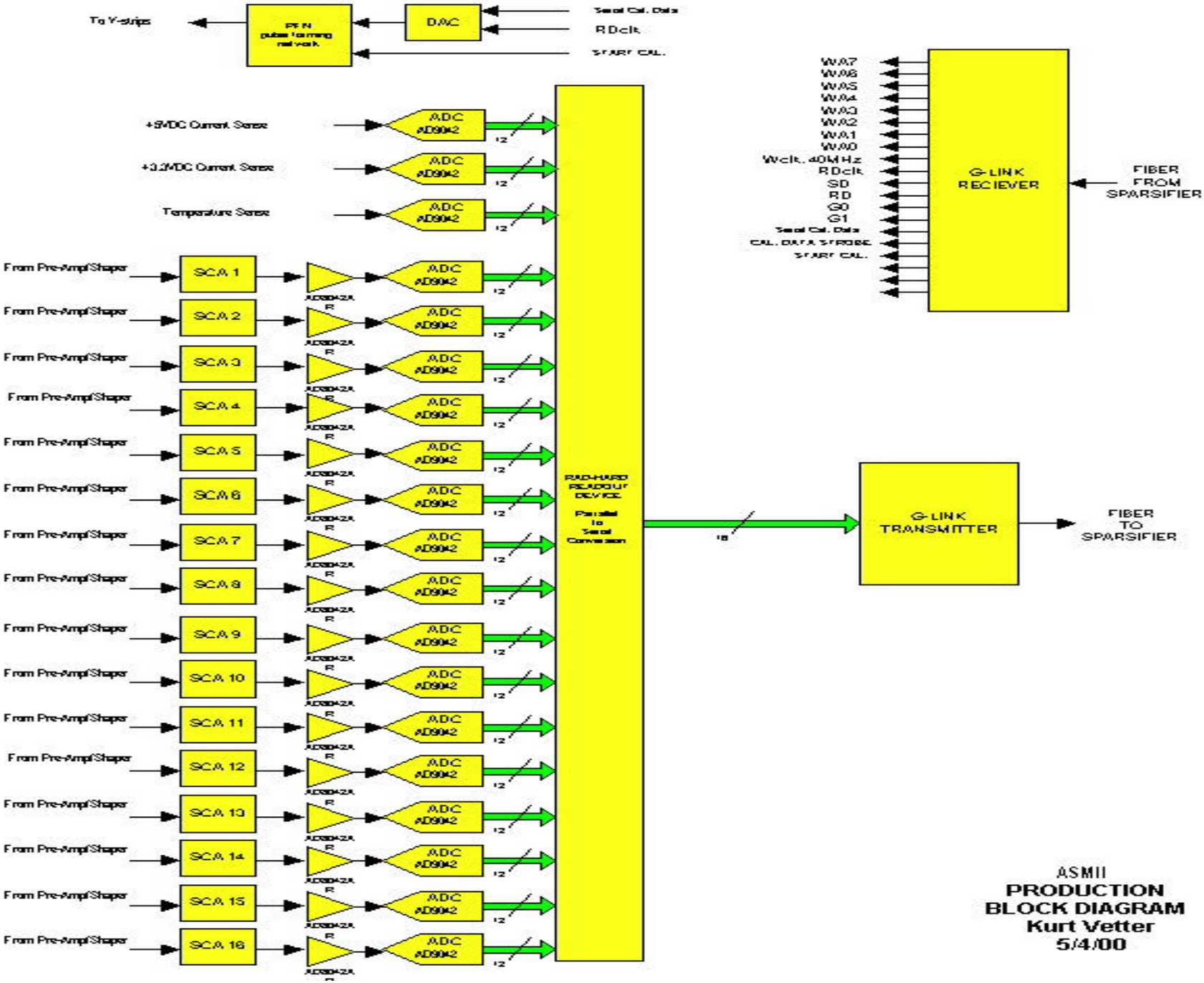

ASMIIa Block Diagram

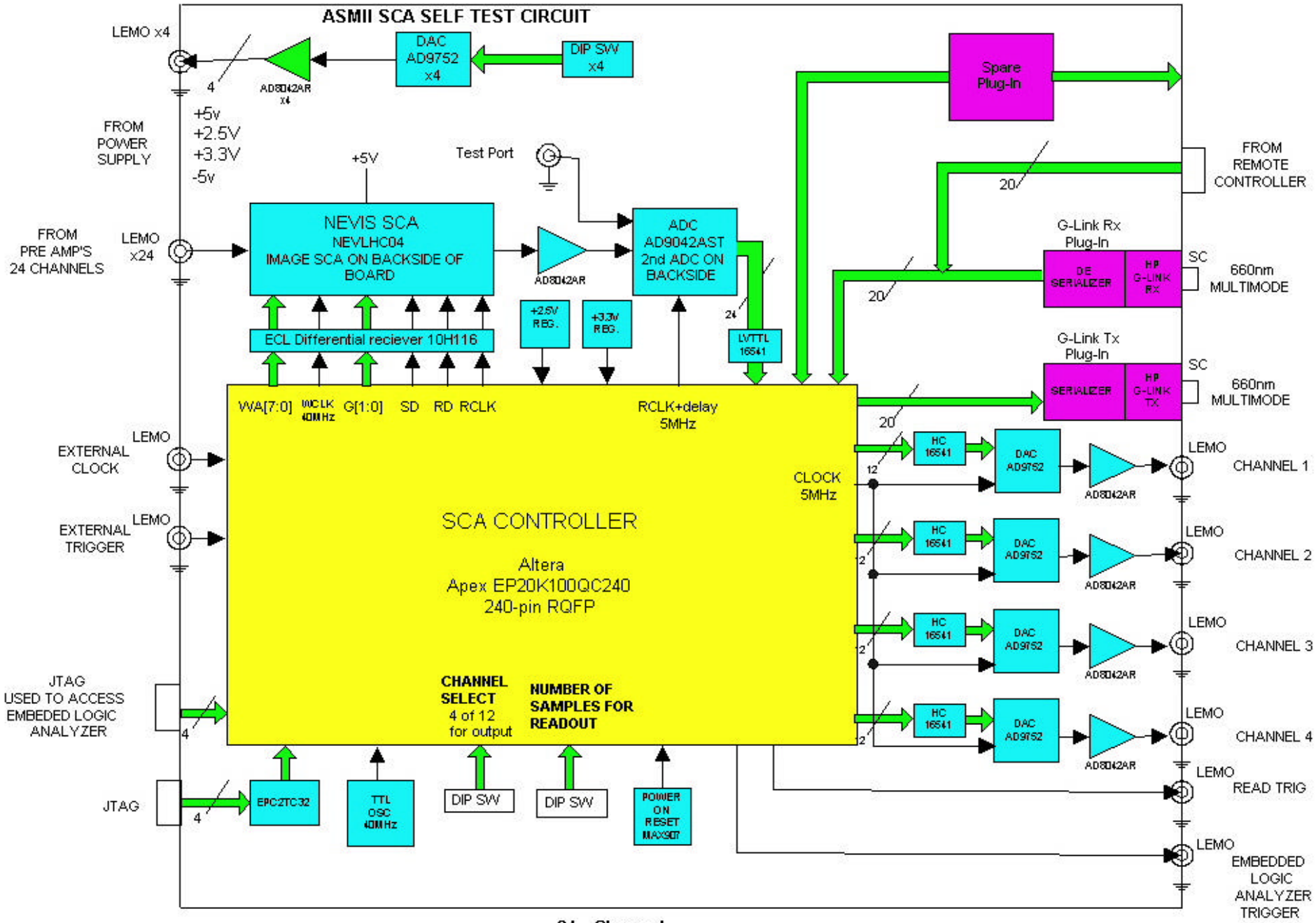

24 - Channel
ASM II PROTOTYPE BOARD
Kurt Vetter

ASMIIa Prototype

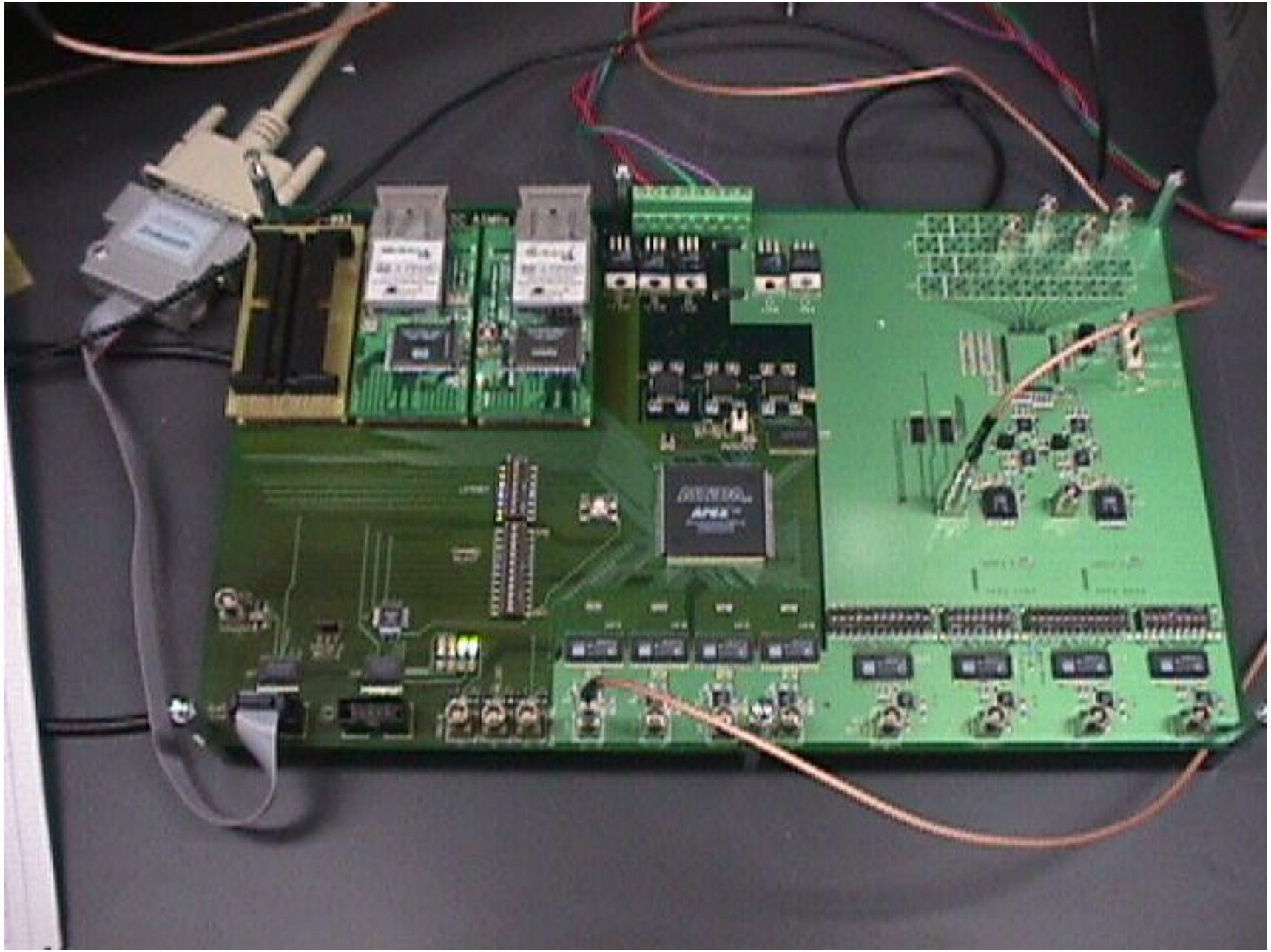

DESIGN DETAILS

Power, Ground and Cooling

- 73W max per faraday shield (2-ASMII's, 4-ASMI's)
- ASMII requires +5v (5.5 amps max)
- ASMI requires +3.3v (1.36 amps max)
- Ground from ASMII to Faraday shield through ASMI?
- Cooling pipe circulates through faraday shield
- Thermal padding between ASMII and faraday shield
- Faraday shield bolted to chamber
- Bolt's pick up ASM ground planes

	1- GLink Tx (HDMP1022) 1- GLink Rx (HDPM1024)	2-Glink Tx's 1-Glink Rx
ASM I	4.5 watts per ASMI (47mw per channel)	4.5 watts per ASMI (47mw per channel)
ASM II	25.2 watts (5.04amps@5V) per ASMII	27.5 watts (5.5amps@5V) per ASMII
Total per half chamber, (inside 1-Faraday shield)	68.4 watts	73 watts

Analog Design

CHALLANGES

- Pre-Amp to SCA interface
- SCA readout = 6.67MHz
- ADC performance
- Board Layout and cooling

Main Components

- **SCA**

  - 144x16 cells
  - 40MHz sampling rate
  - 8MHz readout?
  - 5V supply (1v-4v input linear dynamic range)

- **AD9042 (ADC)**

- 12 bits	- Thermal noise = 0.33LSB	- DNL = +-0.4LSB
- 600mw	- Input BW = 100MHz	- INL = +-0.75LSB
- +5V supply	- Analog in = Vref +-0.5v	- SNR = 67dB

* SNR degredation of 1.4dB due to radiation was observed.

Digital Design

- Readout Requirements
- Readout Constraints
- Readout Numerology
- Readout Architectures

Data Flow Requirements

- Transmit (4x16) 12-bit samples within 10us.
- Transmit on-board current and temperature data as 12-bit words. Data will be fused into main data stream.
- Transmit board identification (board ID).
- Receive and initiate calibration sequence.

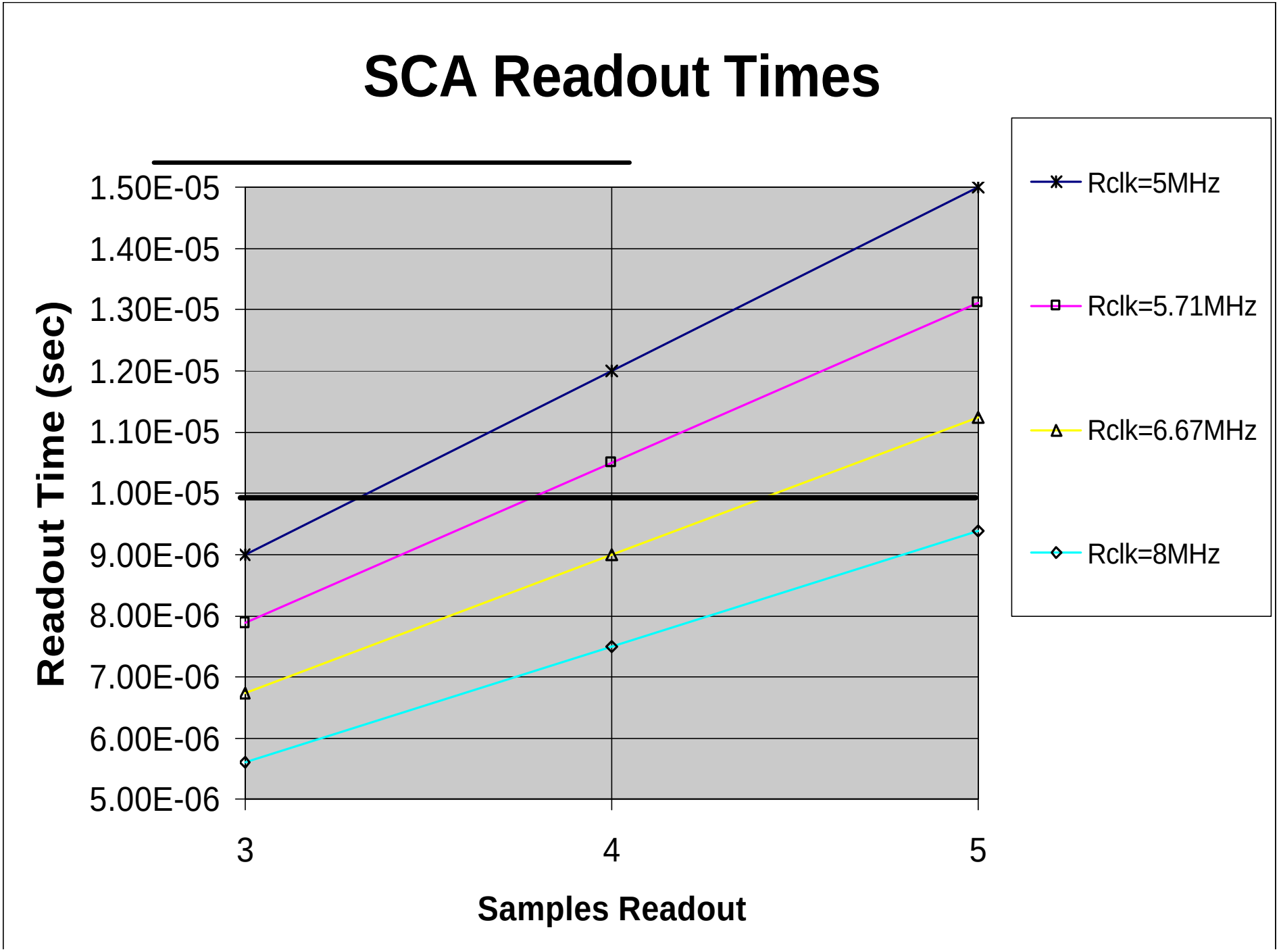
SCA Readout Times
Readout Time (sec)
1.50E-05
1.40E-05
1.30E-05
1.20E-05
1.10E-05
1.00E-05
9.00E-06
8.00E-06
7.00E-06
6.00E-06
5.00E-06
3
4
5
Samples Readout
Rclk=5MHz
Rclk=5.71MHz
Rclk=6.67MHz
Rclk=8MHz

SCA Readout Numerology

ASMII READOUT NUMEROLOGY

Kurt Vetter

4/25/00

KNOWN PARAMATER DESCRIPTION	**PARAMATER**			
Trigger Rate = 100KHz	1.00E+05			
Readout time (1/Trigger Rate)	1.00E-05			
N = samples	3	4	5	
bits per ADC conversion	10	12		
192 channels per ASMII	192			
16 SCA's per ASMII	16			
Write Clock = 40MHz	4.00E+07			
Clock Divisor = k	8	7	6	5
Read Clock = 40MHz/k	5.00E+06	5.71E+06	6.67E+06	8.00E+06
SCA per sample readout time (15 read clocks for 12-channels)	3.00E-06	2.63E-06	2.25E-06	1.88E-06

Readout Clock	**Number of samples**	**SCA Readout Time**
5MHz	3	9.00E-06
	4	1.20E-05
	5	1.50E-05
5.71MHz	**3**	**7.88E-06**
	4	**1.05E-05**
	5	**1.31E-05**
6.67MHz	3	6.75E-06
	4	9.00E-06
	5	1.13E-05
8MHz	**3**	**5.63E-06**
	4	**7.50E-06**
	5	**9.38E-06**

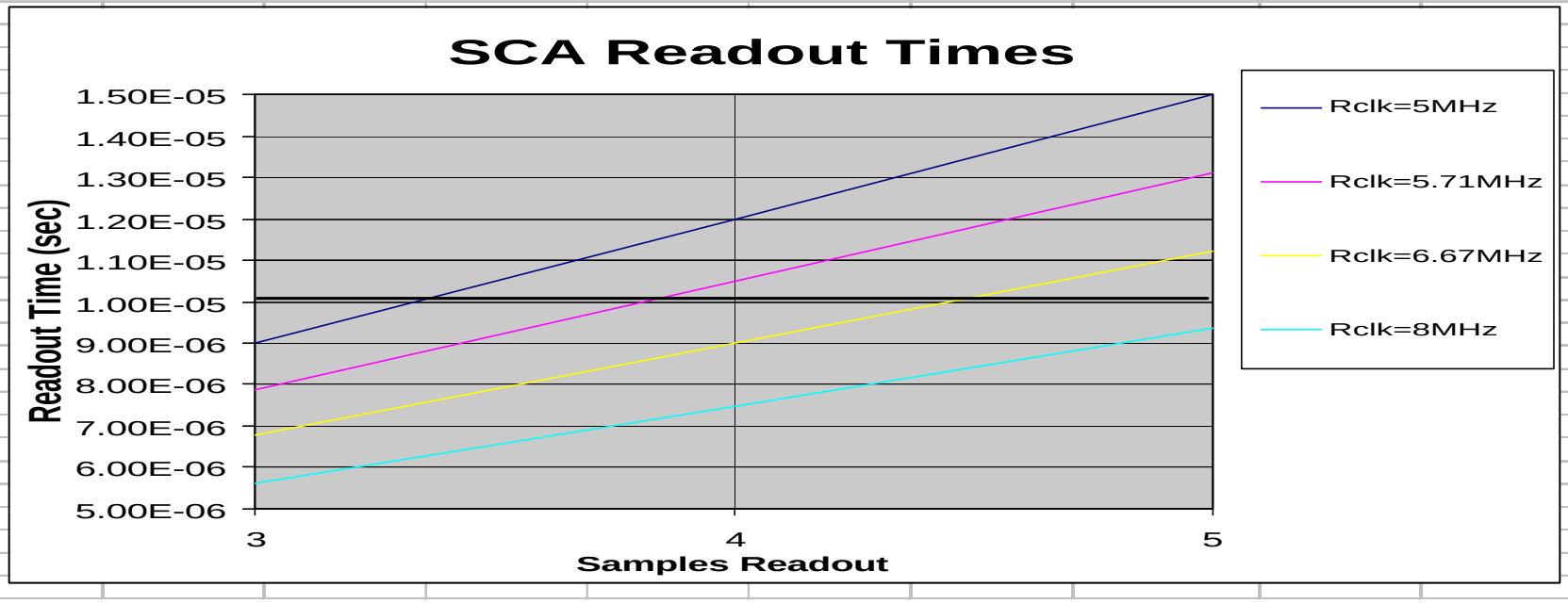

Four Sample(12 ch. Per sample) SCA readout

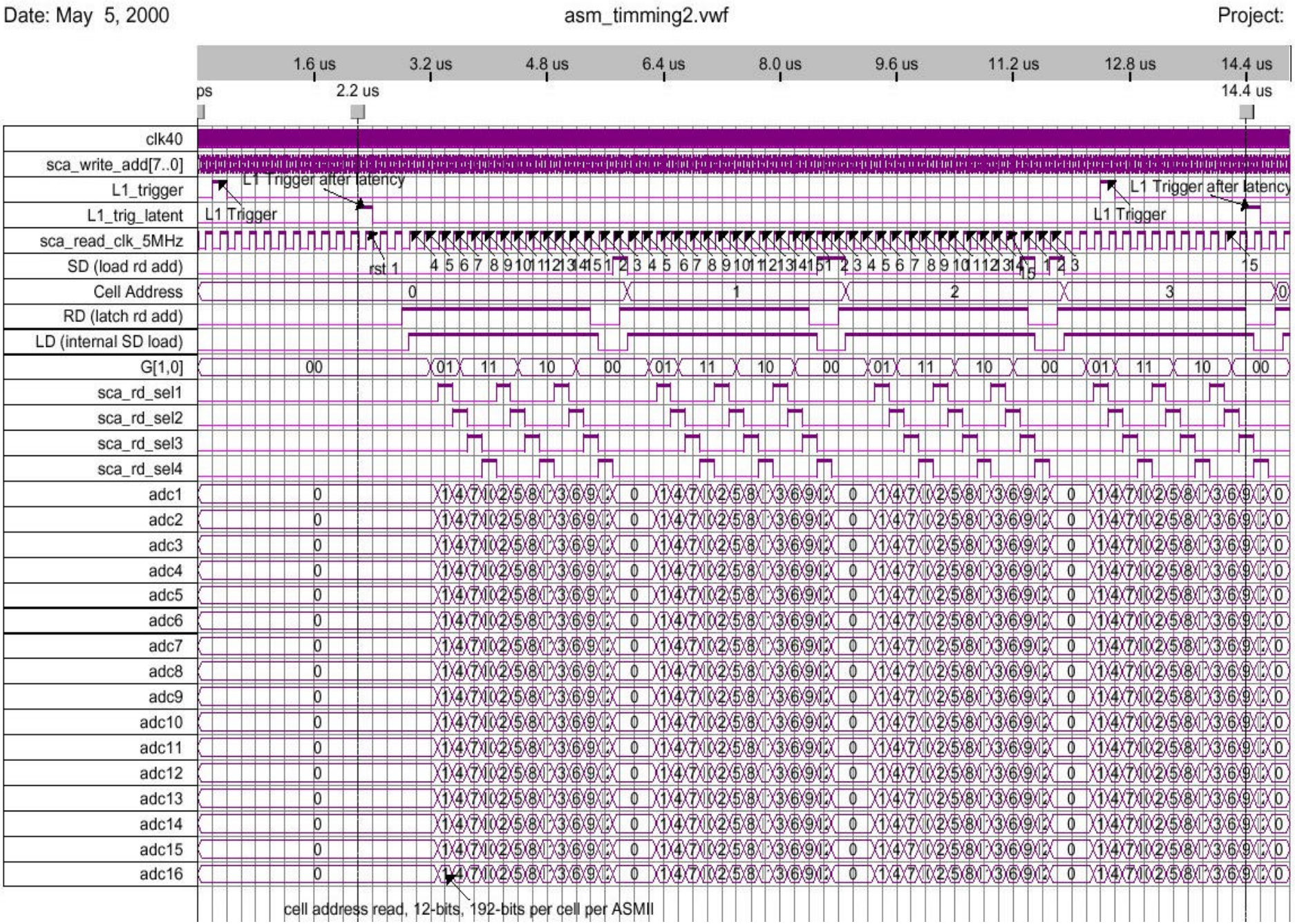

Single Sample (12 channel) SCA readout

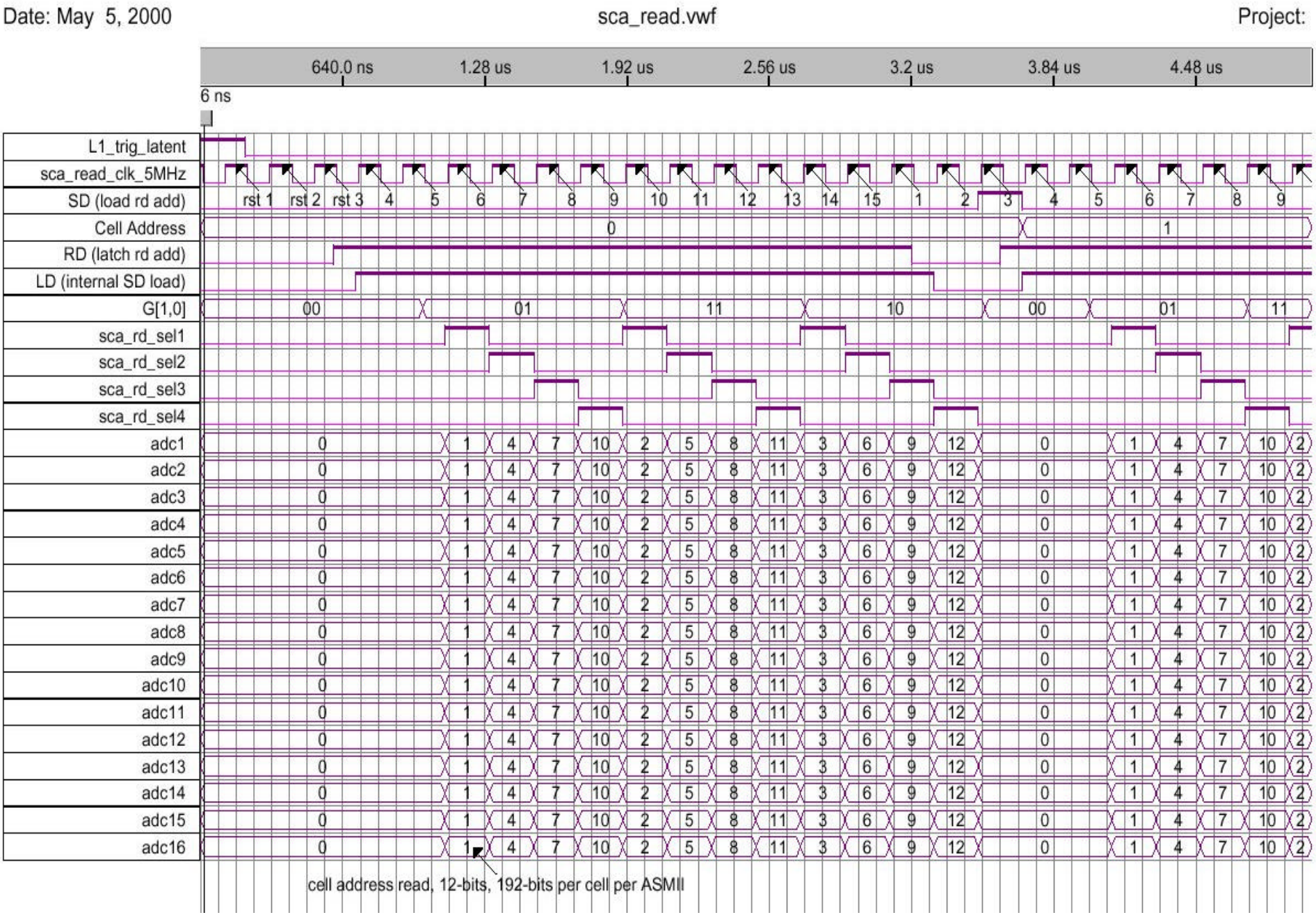

ADC Readout Architectures

- Requires only shift-register functionality.
- Possible approaches
  - Custom ASIC (expensive)
  - Off the shelf shift registers (cheap, subject to SEU, so what? This only means a single bit of one sample will be in error)
- May need to implement control logic on ASMII for calibration and monitoring?
- Following diagram illustrates technology independent implementation.

ASMII Readout Scheme Block Diagram

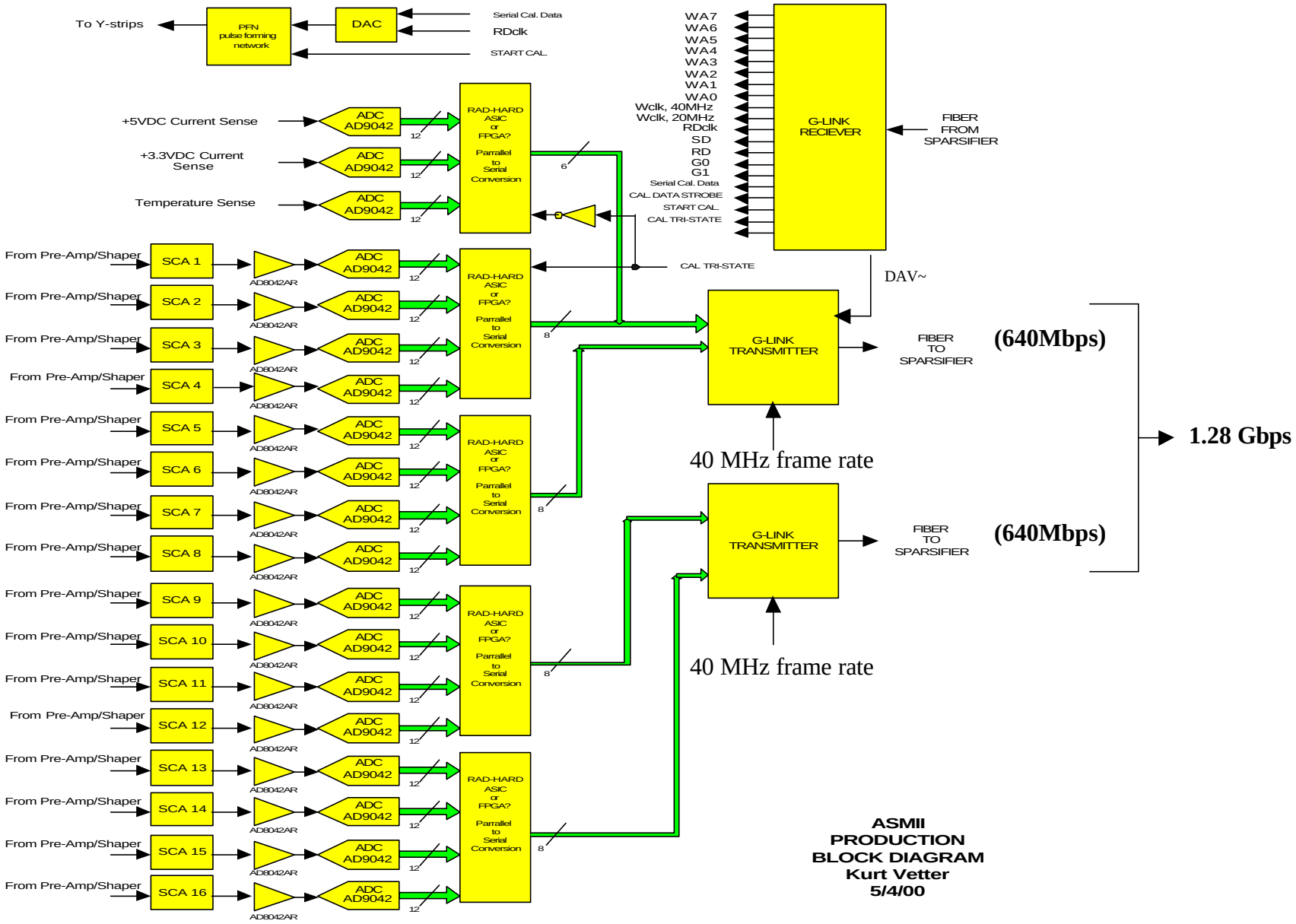

Possible Optical Link Configurations

(Consider only G-Link at this time)

LINK CONFIGURATION	COMMENTS
Two Links @ 40MHz (SFM) 2-bits per ADC	Cannot support 5-samples. 4-samples may be tight.
Single Link, double frame Mode 2-bits per ADC	Cannot support SCA readout >5MHz.
Two Links double frame mode 4-bits per ADC	Can support 5-samples.

- Double frame mode implies 80MHz frame clock.
- SFM – single frame mode.

Readout Implementation

2-Bits per ADC, Single Frame Mode
(1 of 2 transmitter links shown)

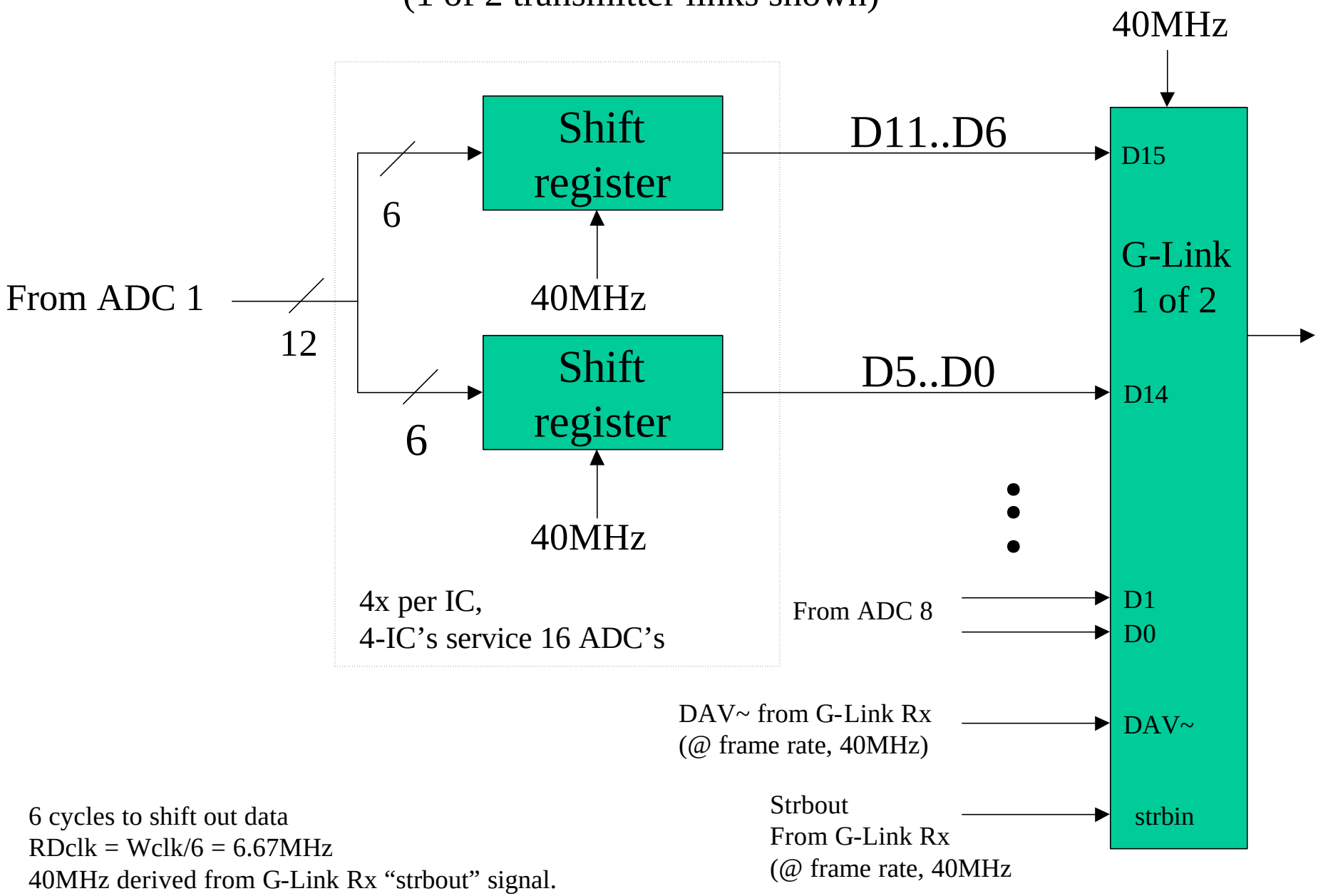

6 cycles to shift out data
RDclk = Wclk/6 = 6.67MHz
40MHz derived from G-Link Rx "strbout" signal.
Pipeline cannot accommodate higher readout rates.

Readout Implementation

2-Bits per ADC, Double Frame Mode
One Link Required

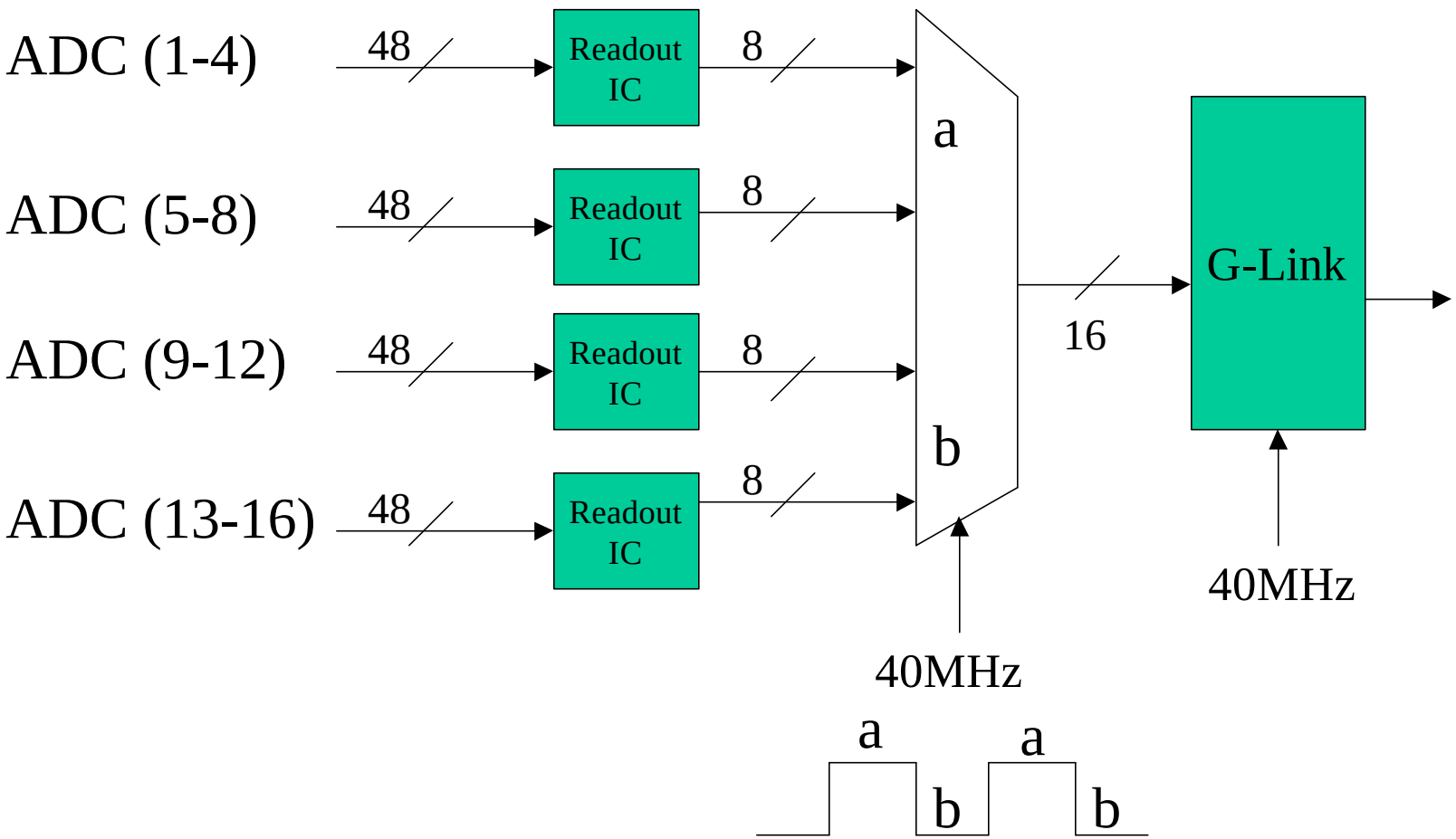

Can add register before mux at 40MHz.
Select mux at 80MHZ.
80MHz derived from G-Link STRBOUT.

Readout Implementation

4-Bits per ADC, Double Frame Mode

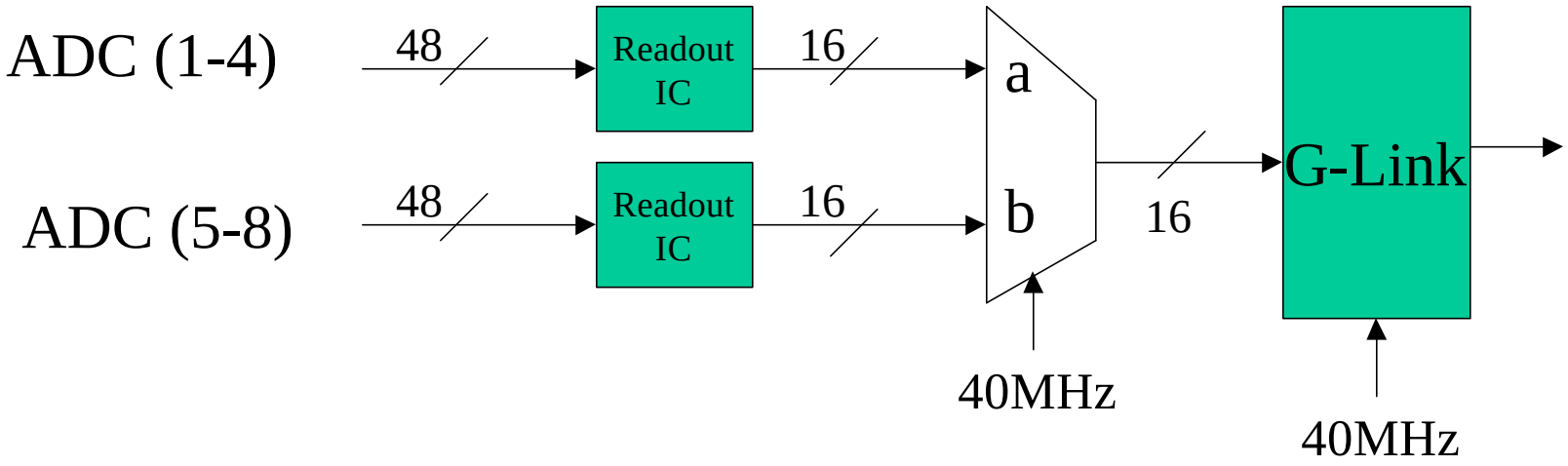

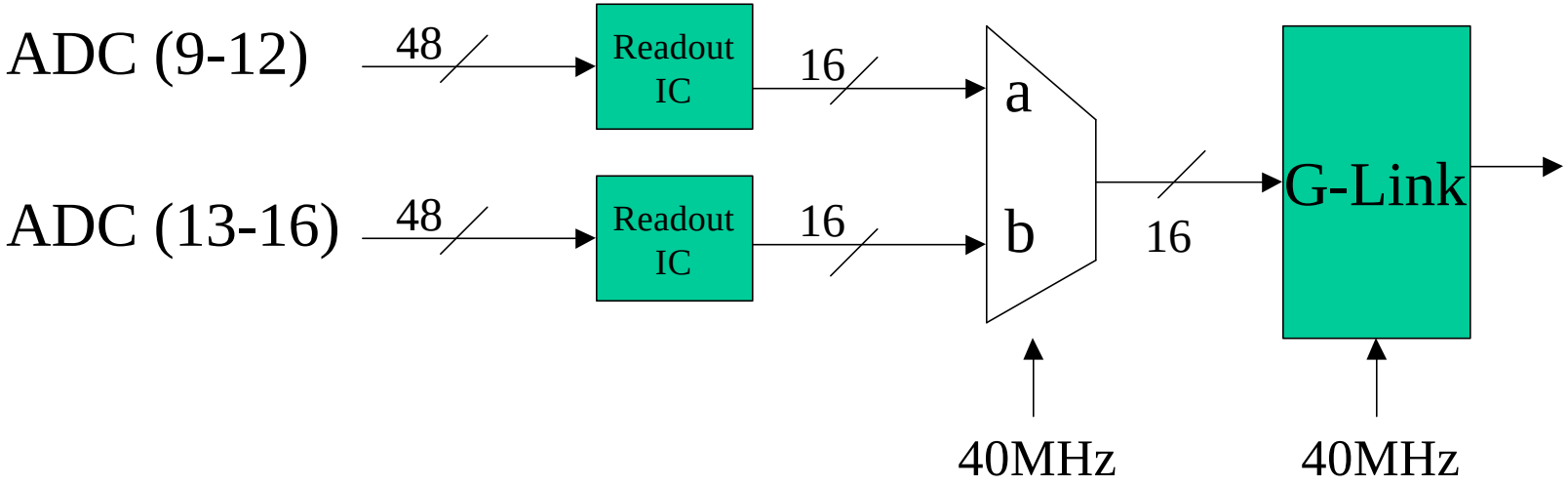

Readout Link Summary

- Serialize ADC's to dedicated G-Link lines (2-link lines per ADC)
- SCA readout rate determined by number of time samples.
- Monitored data (supply current, temp) fused into one Link.

Optical Links

- One receiver required

- One or two transmitters?
  - Probably two
  - Two links provide inherent redundancy
  - Also more power and space
  - Can run at 40MHz instead of 80MHz

- HDMP 1032/34 available
  - Lower power (590mw Tx, 660mW Rx)
  - Lower BW (1.12 Gbps)
  - 16 bit interface

Radiation

ASMII IC's requiring testing

COMPONENT	COMMENTS
HDMP 1022	Extensive testing has been performed. Plan to conduct our own test.
HDMP 1024	No testing performed. Must test on our own.
SCA	Testing to be completed by LAr.
AD9042 (ADC)	Used on LAr FEB. Extensive testing performed by Denes at Princton.
AD8042 (op-amp)	Used on LAr FEB. Ionizing survival test done by LAr.
Level Translators?	Required for SCA. Need to select and test.
DAC (used for Calibration PFN)	Need to select and test.
Readout Interface IC (FPGA or ASIC?)	Need to choose technology and test.

ASMII VME DAQ

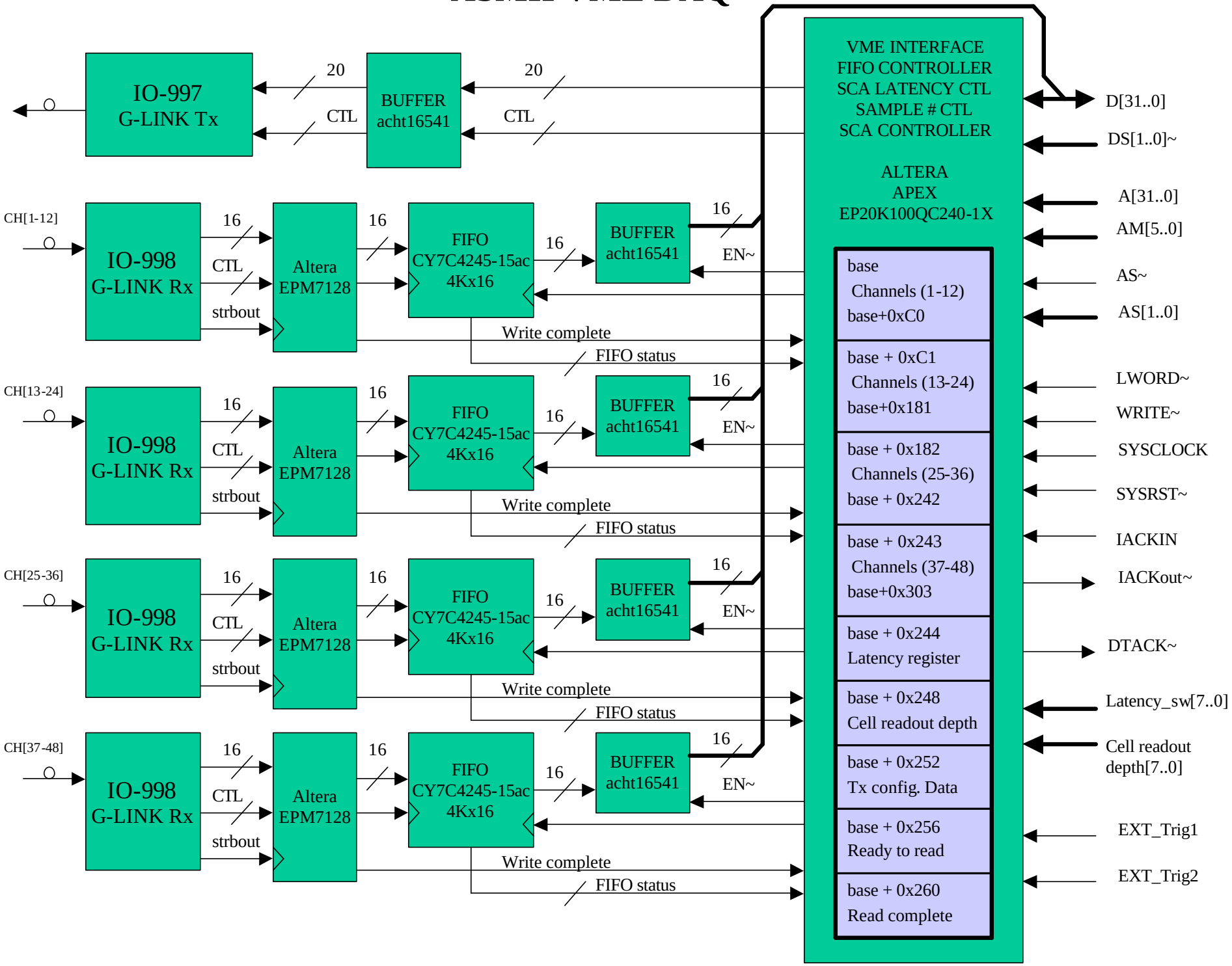

VME DAQ

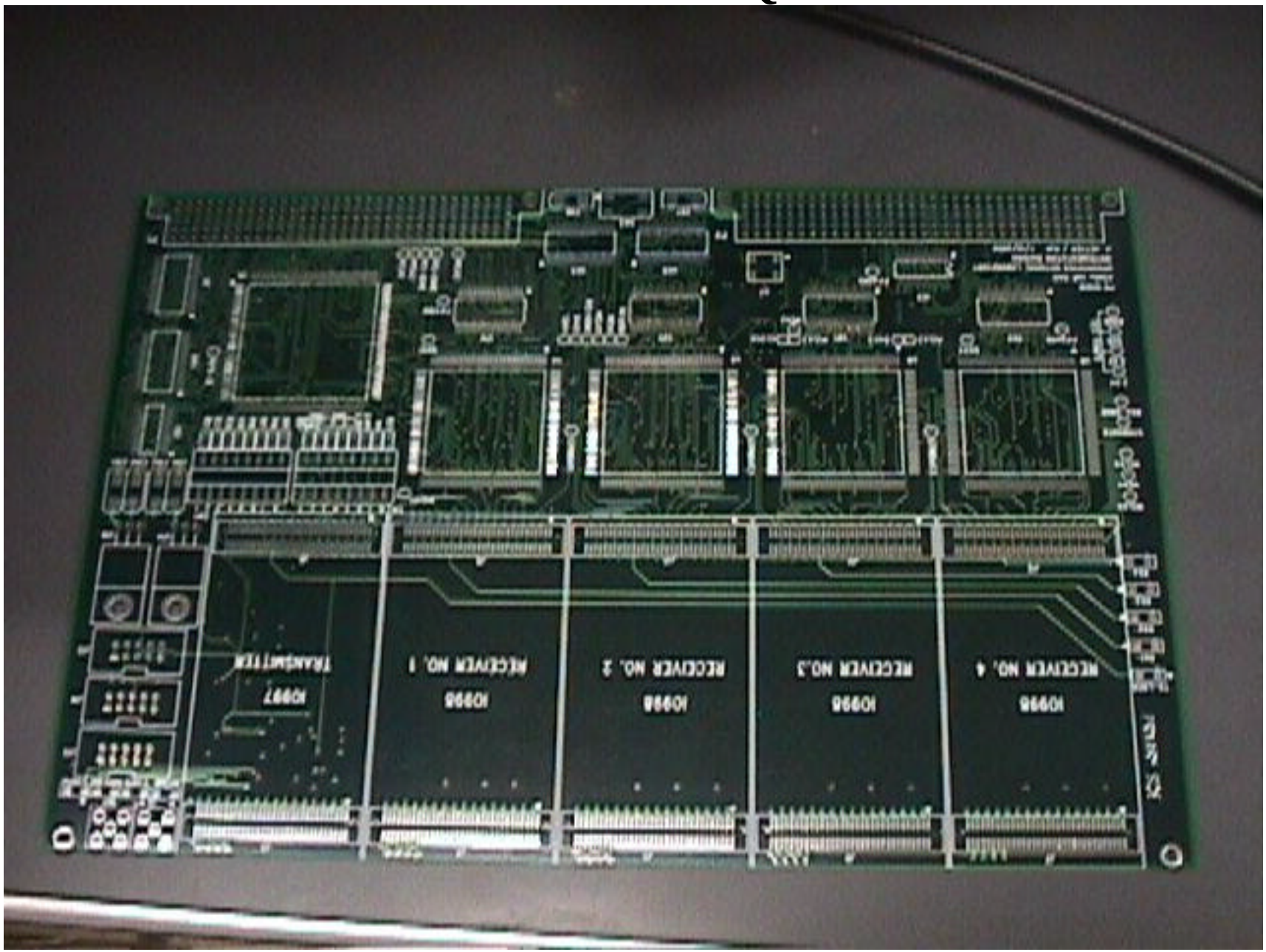
RECEIVER NO. 4
10998
RECEIVER NO.3
10998
RECEIVER NO. 2
10998
RECEIVER NO. 1
10998
TRANSMITTER
10997