Proposed Circuit for Calibration

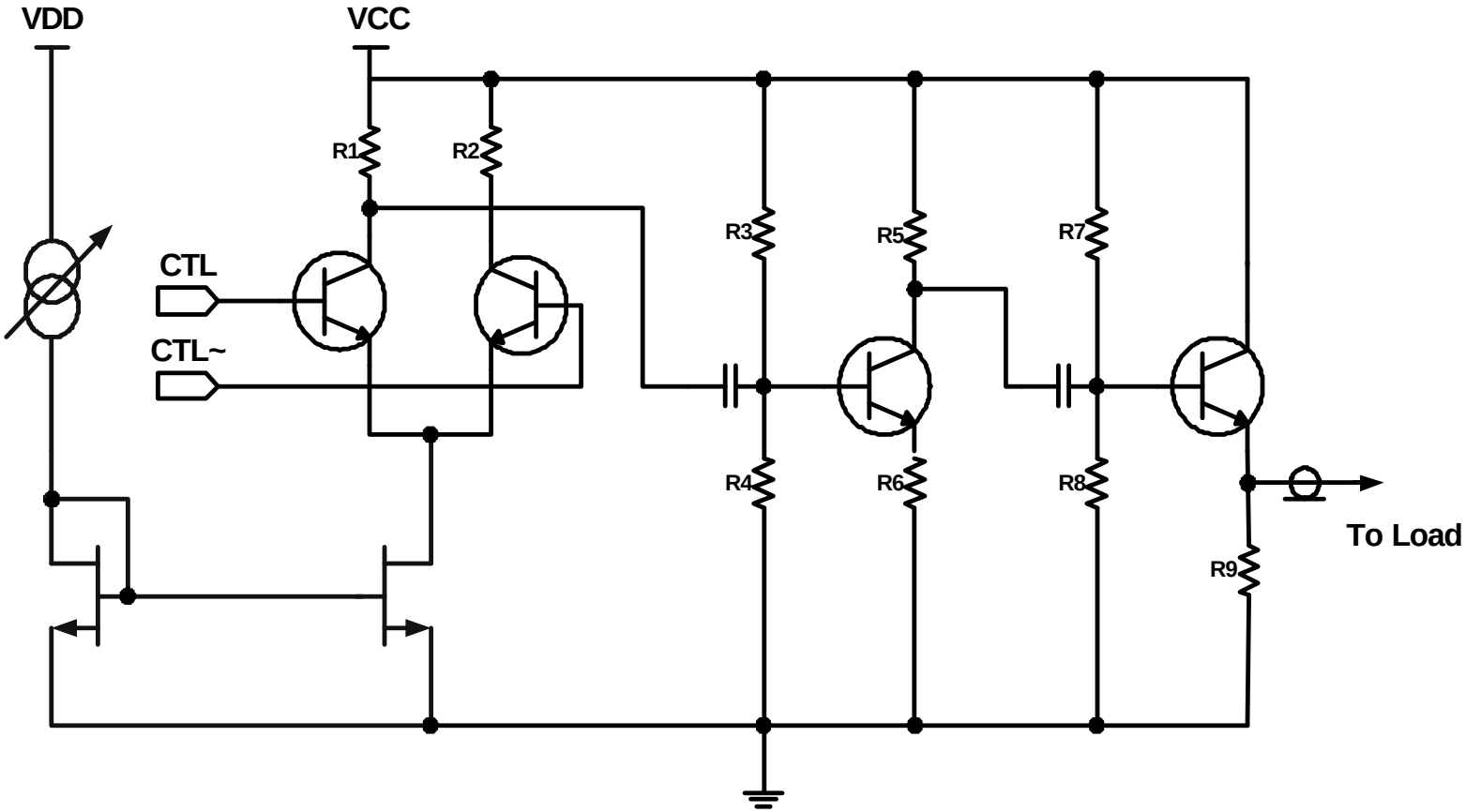

DATA SHEET

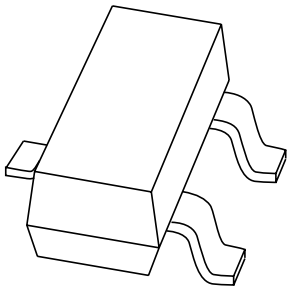

BFR540
NPN 9 GHz wideband transistor

Product specification
Supersedes data of 1999 Aug 23

2000 May 30

Philips
Semiconductors

PHILIPS

NPN 9 GHz wideband transistor BFR540

FEATURES

- High power gain
- Low noise figure
- High transition frequency
- Gold metallization ensures excellent reliability.

APPLICATIONS

RF front end wideband applications in the GHz range, such as analog and digital cellular telephones, cordless telephones (CT1, CT2, DECT, etc.), radar detectors, satellite TV tuners (SATV), MATV/CATV amplifiers and repeater amplifiers in fibre-optic systems.

DESCRIPTION

NPN silicon planar epitaxial transistor in a SOT23 plastic package.

PINNING

PIN	DESCRIPTION
1	base
2	emitter
3	collector

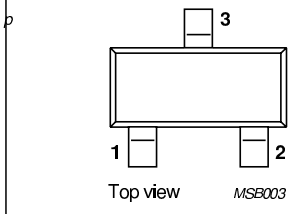

Marking code: N29.

Fig.1 SOT23.

QUICK REFERENCE DATA

SYMBOL	PARAMETER	CONDITIONS	MIN.	TYP.	MAX.	UNIT
V_{CBO}	collector-base voltage	open emitter	–	–	20	V
V_{CES}	collector-emitter voltage	R_{BE} = 0	–	–	15	V
I_C	DC collector current		–	–	120	mA
P_{tot}	total power dissipation	$T_s \leq 70$ °C; note 1	–	–	500	mW
h_{FE}	DC current gain	I_C = 40 mA; V_{CE} = 8 V	100	120	250	
C_{re}	feedback capacitance	$I_C = i_c = 0$; V_{CB} = 8 V; f = 1 MHz	–	0.6	–	pF
f_T	transition frequency	I_C = 40 mA; V_{CE} = 8 V; f = 1 GHz	–	9	–	GHz
G_{UM}	maximum unilateral power gain	I_C = 40 mA; V_{CE} = 8 V; T_{amb} = 25 °C; f = 900 MHz	–	14	–	dB
		I_C = 40 mA; V_{CE} = 8 V; T_{amb} = 25 °C; f = 2 GHz	–	7	–	dB
$\|s_{21}\|^2$	insertion power gain	I_C = 40 mA; V_{CE} = 8 V; T_{amb} = 25 °C; f = 900 MHz	12	13	–	dB
F	noise figure	$\Gamma_s = \Gamma_{opt}$; I_C = 10 mA; V_{CE} = 8 V; T_{amb} = 25 °C; f = 900 MHz	–	1.3	1.8	dB
		$\Gamma_s = \Gamma_{opt}$; I_C = 40 mA; V_{CE} = 8 V; T_{amb} = 25 °C; f = 900 MHz	–	1.9	2.4	dB
		$\Gamma_s = \Gamma_{opt}$; I_C = 10 mA; V_{CE} = 8 V; T_{amb} = 25 °C; f = 2 GHz	–	2.1	–	dB

Note

1. T_s is the temperature at the soldering point of the collector tab.

LIMITING VALUES

In accordance with the Absolute Maximum System (IEC 60134).

SYMBOL	PARAMETER	CONDITIONS	MIN.	MAX.	UNIT
V_{CBO}	collector-base voltage	open emitter	–	20	V
V_{CES}	collector-emitter voltage	$R_{BE} = 0$	–	15	V
V_{EBO}	emitter-base voltage	open collector	–	2.5	V
I_C	DC collector current		–	120	mA
P_{tot}	total power dissipation	$T_s \leq 70$ °C; note 1	–	500	mW
T_{stg}	storage temperature		–65	150	°C
T_j	junction temperature		–	175	°C

Note

1. T_s is the temperature at the soldering point of the collector tab.

THERMAL CHARACTERISTICS

SYMBOL	PARAMETER	CONDITIONS	VALUE	UNIT
$R_{th\ j\text{-}s}$	from junction to soldering point	see note 1	260	K/W

Note

1. T_s is the temperature at the soldering point of the collector tab.

CHARACTERISTICS

T_j = 25 °C unless otherwise specified.

SYMBOL	PARAMETER	CONDITIONS	MIN.	TYP.	MAX.	UNIT
I_{CBO}	collector cut-off current	$I_E = 0$; $V_{CB} = 8$ V	–	–	50	nA
h_{FE}	DC current gain	$I_C = 40$ mA; $V_{CE} = 8$ V	100	120	250	
C_e	emitter capacitance	$I_C = i_c = 0$; $V_{EB} = 0.5$ V; f = 1 MHz	–	2	–	pF
C_c	collector capacitance	$I_E = i_e = 0$; $V_{CB} = 8$ V; f = 1 MHz	–	0.9	–	pF
C_{re}	feedback capacitance	$I_C = 0$; $V_{CB} = 8$ V; f = 1 MHz	–	0.6	–	pF
f_T	transition frequency	$I_C = 40$ mA; $V_{CE} = 8$ V; f = 1 GHz	–	9	–	GHz
G_{UM}	maximum unilateral power gain; note 1	$I_C = 40$ mA; $V_{CE} = 8$ V; $T_{amb} = 25$ °C; f = 900 MHz	–	14	–	dB
		$I_C = 40$ mA; $V_{CE} = 8$ V; $T_{amb} = 25$ °C; f = 2 GHz	–	7	–	dB
$\|s_{21}\|^2$	insertion power gain	$I_C = 40$ mA; $V_{CE} = 8$ V; $T_{amb} = 25$ °C; f = 900 MHz	12	13	–	dB
F	noise figure	$\Gamma_s = \Gamma_{opt}$; $I_C = 10$ mA; $V_{CE} = 8$ V; $T_{amb} = 25$ °C; f = 900 MHz	–	1.3	1.8	dB
		$\Gamma_s = \Gamma_{opt}$; $I_C = 40$ mA; $V_{CE} = 8$ V; $T_{amb} = 25$ °C; f = 900 MHz	–	1.9	2.4	dB
		$\Gamma_s = \Gamma_{opt}$; $I_C = 10$ mA; $V_{CE} = 8$ V; $T_{amb} = 25$ °C; f = 2 GHz	–	2.1	–	dB
P_{L1}	output power at 1 dB gain compression	$I_C = 40$ mA; $V_{CE} = 8$ V; $R_L = 50\ \Omega$; $T_{amb} = 25$ °C; f = 900 MHz	–	21	–	dBm
ITO	third order intercept point	note 2	–	34	–	dBm
V_o	output voltage; note 3	$I_C = 40$ mA; $V_{CE} = 8$ V; $Z_L = Z_S = 75\ \Omega$; $T_{amb} = 25$ °C	–	550	–	mV

Notes

1. G_{UM} is the maximum unilateral power gain, assuming s_{12} is zero and

$$G_{UM} = 10 \log \frac{|s_{21}|^2}{(1-|s_{11}|^2)(1-|s_{22}|^2)} \text{ dB.}$$

2. $I_C = 40$ mA; $V_{CE} = 8$ V; $R_L = 50\ \Omega$;
   $T_{amb} = 25$ °C; f = 900 MHz;
   $f_p = 900$ MHz; $f_q = 902$ MHz;
   measured at $f_{(2p-q)} = 898$ MHz and $f_{(2q-p)} = 904$ MHz.
3. $d_{im} = -60$ dB (DIN 45004B);
   $V_p = V_O$; $V_q = V_O - 6$ dB; $f_p = 795.25$ MHz;
   $V_R = V_O - 6$ dB; $f_q = 803.25$ MHz; $f_r = 805.25$ MHz;
   measured at $f_{(p+q-r)} = 793.25$ MHz; preliminary data.

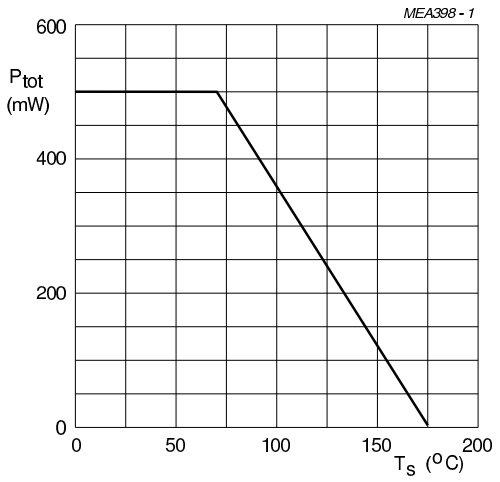

Fig.2 Power derating curve.

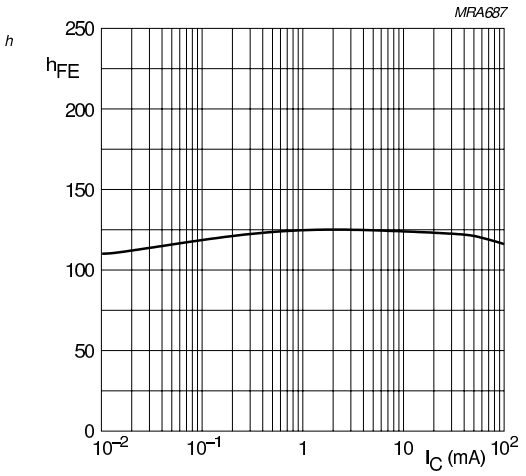

V_{CE} = 8 V.

Fig.3 DC current gain as a function of collector current.

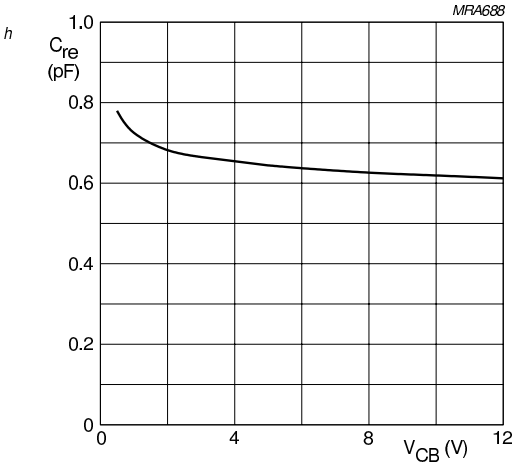

I_C = 0; f = 1 MHz.

Fig.4 Feedback capacitance as a function of collector-base voltage.

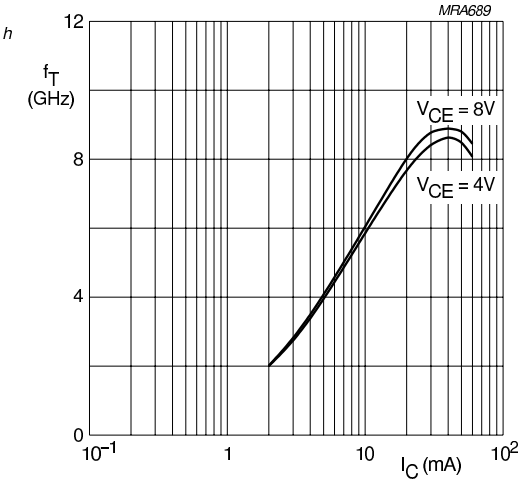

T_{amb} = 25 °C; f = 1 GHz.

Fig.5 Transition frequency as a function of collector current.

In Figs 6 to 9, G_{UM} = maximum unilateral power gain; MSG = maximum stable gain; G_{max} = maximum available gain.

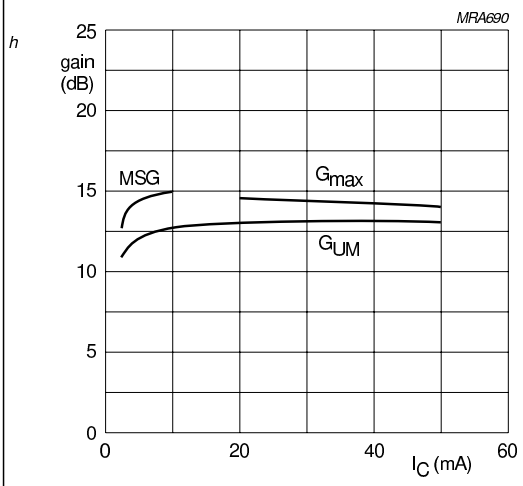

V_{CE} = 8 V; f = 900 MHz.

Fig.6 Gain as a function of collector current.

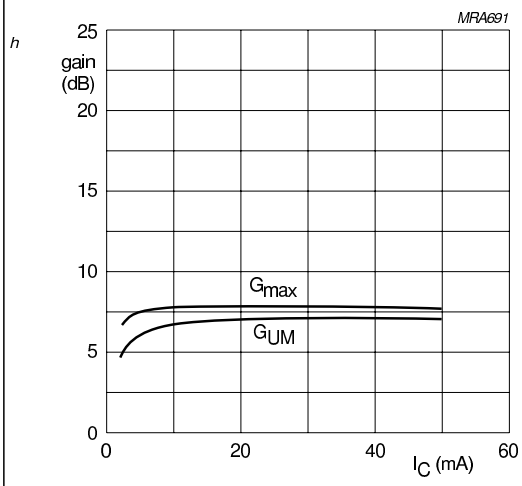

V_{CE} = 8 V; f = 2 GHz.

Fig.7 Gain as a function of collector current.

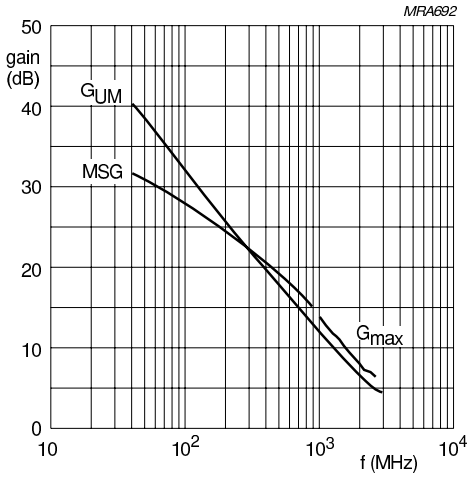

V_{CE} = 8 V; I_c = 10 mA.

Fig.8 Gain as a function of frequency.

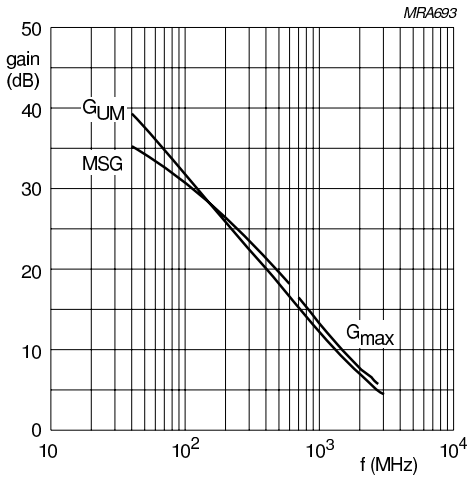

V_{CE} = 8 V; I_c = 40 mA.

Fig.9 Gain as a function of frequency.

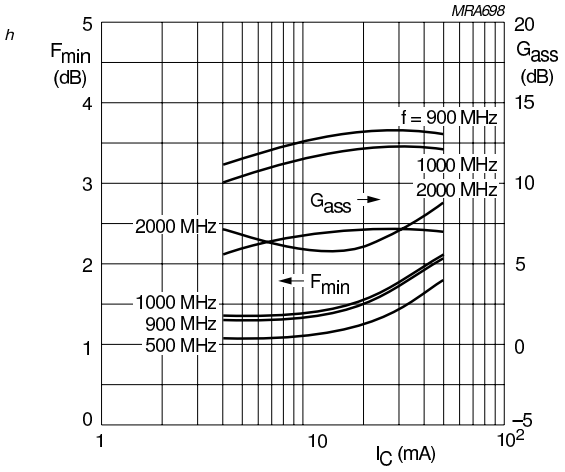

V_{CE} = 8 V.

Fig.10 Minimum noise figure and associated available gain as functions of collector current.

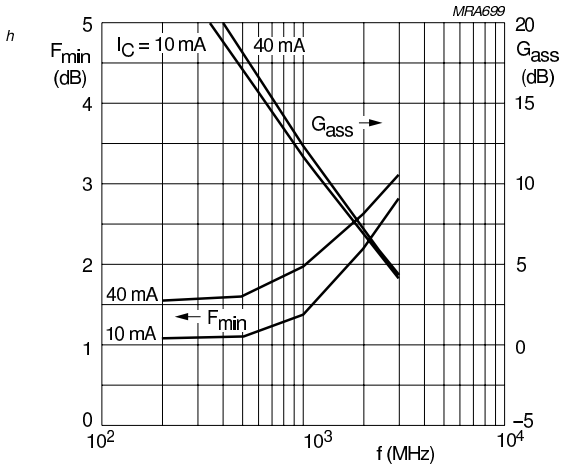

V_{CE} = 8 V.

Fig.11 Minimum noise figure and associated available gain as functions of frequency.

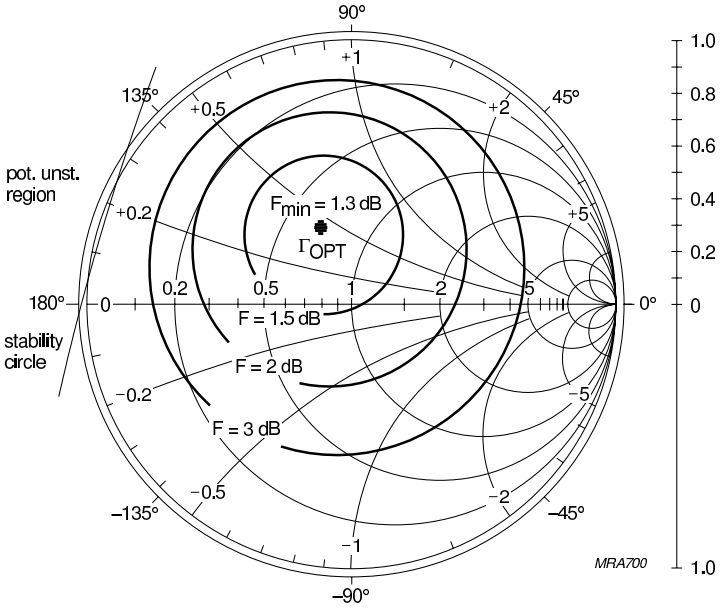

Z_o = 50 Ω.
V_{CE} = 8 V; I_C = 10 mA; f = 900 MHz.

Fig.12 Noise circle figure.

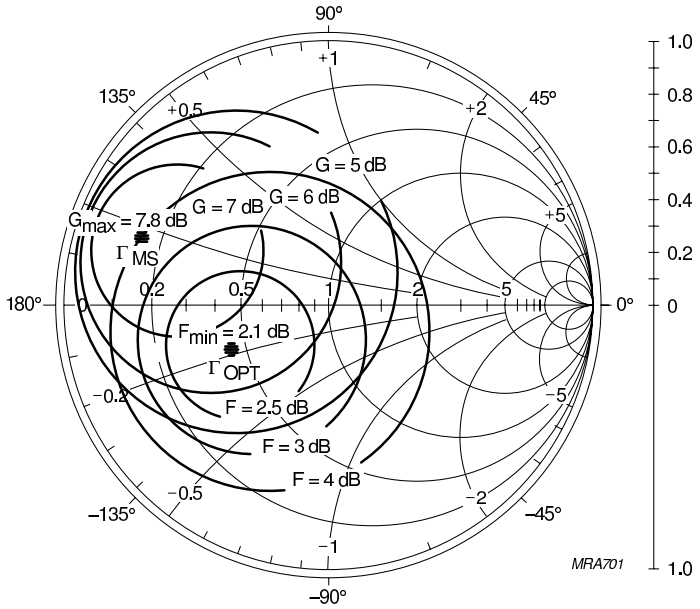

$Z_o = 50\ \Omega$.
$V_{CE} = 8$ V; $I_C = 10$ mA; f = 2000 MHz.

Fig.13 Noise circle figure.

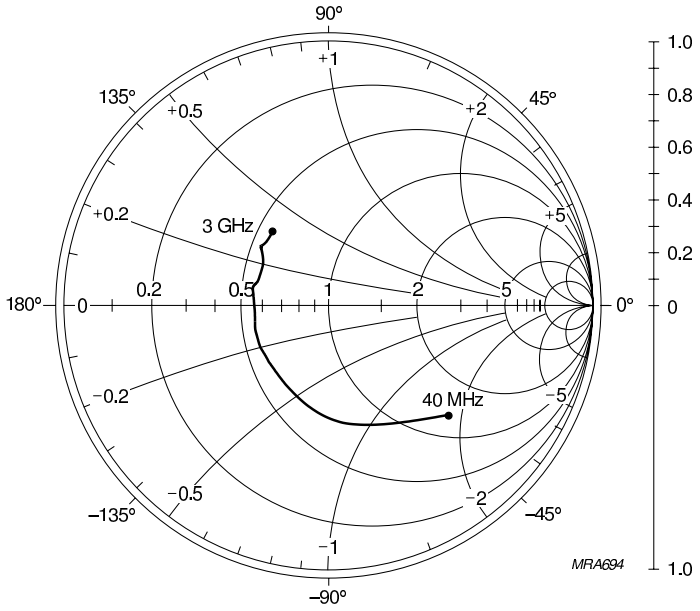

V_{CE} = 8 V; I_C = 40 mA.
Z_o = 50 Ω.

Fig.14 Common emitter input reflection coefficient (s_{11}).

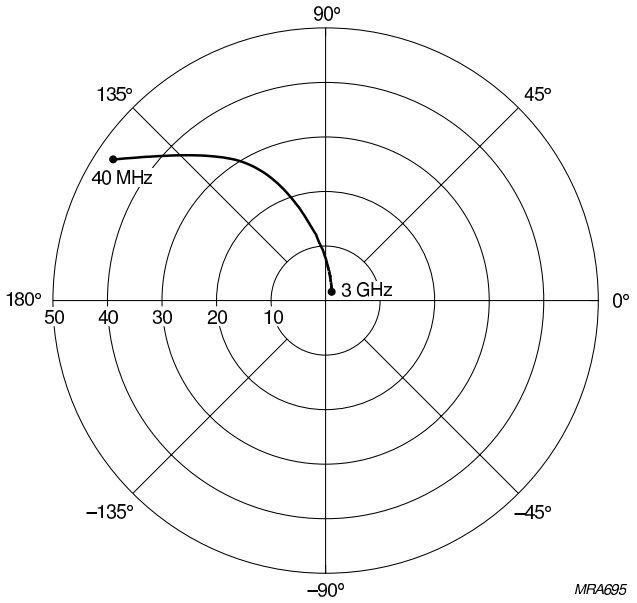

V_{CE} = 8 V; I_C = 40 mA.

Fig.15 Common emitter forward transmission coefficient (s_{21}).

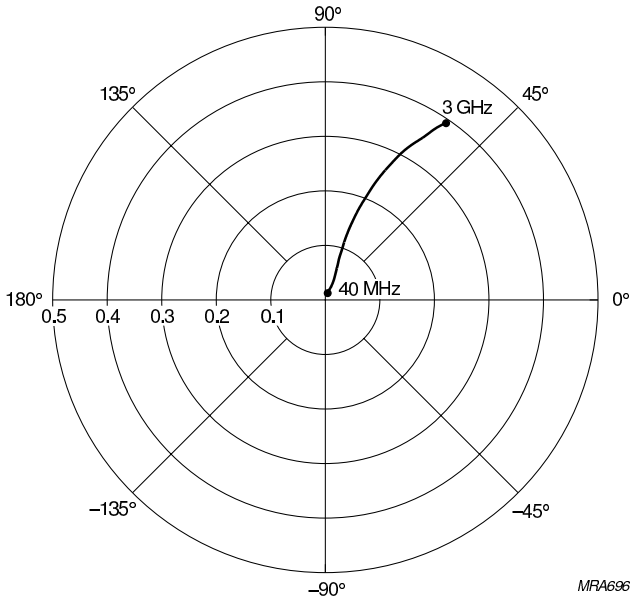

V_{CE} = 8 V; I_C = 40 mA.

Fig.16 Common emitter reverse transmission coefficient (s_{12}).

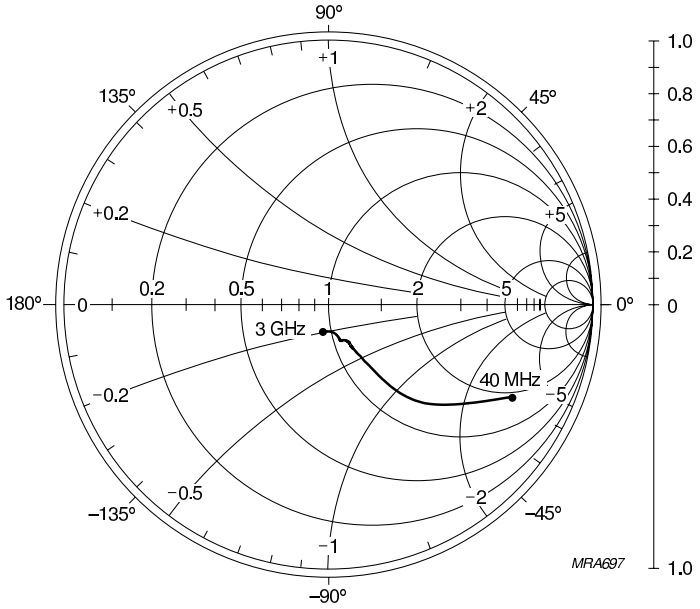

V_{CE} = 8 V; I_C = 40 mA.
Z_o = 50 Ω.

Fig.17 Common emitter output reflection coefficient (s_{22}).

PACKAGE OUTLINE

Plastic surface mounted package; 3 leads **SOT23**

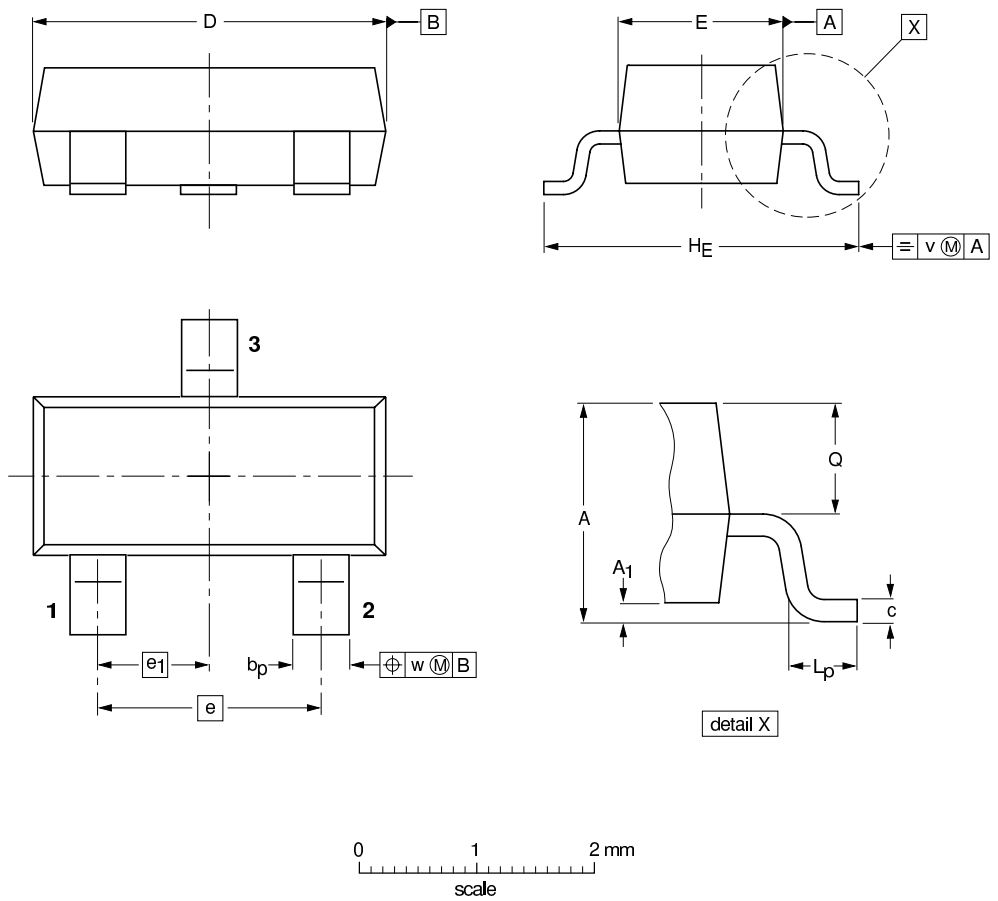

DIMENSIONS (mm are the original dimensions)

UNIT	A	A_1 max.	b_p	c	D	E	e	e_1	H_E	L_p	Q	v	w
mm	1.1 0.9	0.1	0.48 0.38	0.15 0.09	3.0 2.8	1.4 1.2	1.9	0.95	2.5 2.1	0.45 0.15	0.55 0.45	0.2	0.1

OUTLINE VERSION	REFERENCES				EUROPEAN PROJECTION	ISSUE DATE
	IEC	JEDEC	EIAJ			
SOT23		TO-236AB				~~97-02-28~~ 99-09-13

DATA SHEET STATUS

DATA SHEET STATUS	PRODUCT STATUS	DEFINITIONS [1]
Objective specification	Development	This data sheet contains the design target or goal specifications for product development. Specification may change in any manner without notice.
Preliminary specification	Qualification	This data sheet contains preliminary data, and supplementary data will be published at a later date. Philips Semiconductors reserves the right to make changes at any time without notice in order to improve design and supply the best possible product.
Product specification	Production	This data sheet contains final specifications. Philips Semiconductors reserves the right to make changes at any time without notice in order to improve design and supply the best possible product.

Note

1. Please consult the most recently issued data sheet before initiating or completing a design.

DEFINITIONS

Short-form specification — The data in a short-form specification is extracted from a full data sheet with the same type number and title. For detailed information see the relevant data sheet or data handbook.

Limiting values definition — Limiting values given are in accordance with the Absolute Maximum Rating System (IEC 60134). Stress above one or more of the limiting values may cause permanent damage to the device. These are stress ratings only and operation of the device at these or at any other conditions above those given in the Characteristics sections of the specification is not implied. Exposure to limiting values for extended periods may affect device reliability.

Application information — Applications that are described herein for any of these products are for illustrative purposes only. Philips Semiconductors make no representation or warranty that such applications will be suitable for the specified use without further testing or modification.

DISCLAIMERS

Life support applications — These products are not designed for use in life support appliances, devices, or systems where malfunction of these products can reasonably be expected to result in personal injury. Philips Semiconductors customers using or selling these products for use in such applications do so at their own risk and agree to fully indemnify Philips Semiconductors for any damages resulting from such application.

Right to make changes — Philips Semiconductors reserves the right to make changes, without notice, in the products, including circuits, standard cells, and/or software, described or contained herein in order to improve design and/or performance. Philips Semiconductors assumes no responsibility or liability for the use of any of these products, conveys no licence or title under any patent, copyright, or mask work right to these products, and makes no representations or warranties that these products are free from patent, copyright, or mask work right infringement, unless otherwise specified.

NOTES

NOTES

NOTES

Philips Semiconductors – a worldwide company

Argentina: see South America

Australia: 3 Figtree Drive, HOMEBUSH, NSW 2140, Tel. +61 2 9704 8141, Fax. +61 2 9704 8139

Austria: Computerstr. 6, A-1101 WIEN, P.O. Box 213, Tel. +43 1 60 101 1248, Fax. +43 1 60 101 1210

Belarus: Hotel Minsk Business Center, Bld. 3, r. 1211, Volodarski Str. 6, 220050 MINSK, Tel. +375 172 20 0733, Fax. +375 172 20 0773

Belgium: see The Netherlands

Brazil: see South America

Bulgaria: Philips Bulgaria Ltd., Energoproject, 15th floor, 51 James Bourchier Blvd., 1407 SOFIA, Tel. +359 2 68 9211, Fax. +359 2 68 9102

Canada: PHILIPS SEMICONDUCTORS/COMPONENTS, Tel. +1 800 234 7381, Fax. +1 800 943 0087

China/Hong Kong: 501 Hong Kong Industrial Technology Centre, 72 Tat Chee Avenue, Kowloon Tong, HONG KONG, Tel. +852 2319 7888, Fax. +852 2319 7700

Colombia: see South America

Czech Republic: see Austria

Denmark: Sydhavnsgade 23, 1780 COPENHAGEN V, Tel. +45 33 29 3333, Fax. +45 33 29 3905

Finland: Sinikalliontie 3, FIN-02630 ESPOO, Tel. +358 9 615 800, Fax. +358 9 6158 0920

France: 51 Rue Carnot, BP317, 92156 SURESNES Cedex, Tel. +33 1 4099 6161, Fax. +33 1 4099 6427

Germany: Hammerbrookstraße 69, D-20097 HAMBURG, Tel. +49 40 2353 60, Fax. +49 40 2353 6300

Hungary: see Austria

India: Philips INDIA Ltd, Band Box Building, 2nd floor, 254-D, Dr. Annie Besant Road, Worli, MUMBAI 400 025, Tel. +91 22 493 8541, Fax. +91 22 493 0966

Indonesia: PT Philips Development Corporation, Semiconductors Division, Gedung Philips, Jl. Buncit Raya Kav.99-100, JAKARTA 12510, Tel. +62 21 794 0040 ext. 2501, Fax. +62 21 794 0080

Ireland: Newstead, Clonskeagh, DUBLIN 14, Tel. +353 1 7640 000, Fax. +353 1 7640 200

Israel: RAPAC Electronics, 7 Kehilat Saloniki St, PO Box 18053, TEL AVIV 61180, Tel. +972 3 645 0444, Fax. +972 3 649 1007

Italy: PHILIPS SEMICONDUCTORS, Via Casati, 23 - 20052 MONZA (MI), Tel. +39 039 203 6838, Fax +39 039 203 6800

Japan: Philips Bldg 13-37, Kohnan 2-chome, Minato-ku, TOKYO 108-8507, Tel. +81 3 3740 5130, Fax. +81 3 3740 5057

Korea: Philips House, 260-199 Itaewon-dong, Yongsan-ku, SEOUL, Tel. +82 2 709 1412, Fax. +82 2 709 1415

Malaysia: No. 76 Jalan Universiti, 46200 PETALING JAYA, SELANGOR, Tel. +60 3 750 5214, Fax. +60 3 757 4880

Mexico: 5900 Gateway East, Suite 200, EL PASO, TEXAS 79905, Tel. +9-5 800 234 7381, Fax +9-5 800 943 0087

Middle East: see Italy

Netherlands: Postbus 90050, 5600 PB EINDHOVEN, Bldg. VB, Tel. +31 40 27 82785, Fax. +31 40 27 88399

New Zealand: 2 Wagener Place, C.P.O. Box 1041, AUCKLAND, Tel. +64 9 849 4160, Fax. +64 9 849 7811

Norway: Box 1, Manglerud 0612, OSLO, Tel. +47 22 74 8000, Fax. +47 22 74 8341

Pakistan: see Singapore

Philippines: Philips Semiconductors Philippines Inc., 106 Valero St. Salcedo Village, P.O. Box 2108 MCC, MAKATI, Metro MANILA, Tel. +63 2 816 6380, Fax. +63 2 817 3474

Poland: Al.Jerozolimskie 195 B, 02-222 WARSAW, Tel. +48 22 5710 000, Fax. +48 22 5710 001

Portugal: see Spain

Romania: see Italy

Russia: Philips Russia, Ul. Usatcheva 35A, 119048 MOSCOW, Tel. +7 095 755 6918, Fax. +7 095 755 6919

Singapore: Lorong 1, Toa Payoh, SINGAPORE 319762, Tel. +65 350 2538, Fax. +65 251 6500

Slovakia: see Austria

Slovenia: see Italy

South Africa: S.A. PHILIPS Pty Ltd., 195-215 Main Road Martindale, 2092 JOHANNESBURG, P.O. Box 58088 Newville 2114, Tel. +27 11 471 5401, Fax. +27 11 471 5398

South America: Al. Vicente Pinzon, 173, 6th floor, 04547-130 SÃO PAULO, SP, Brazil, Tel. +55 11 821 2333, Fax. +55 11 821 2382

Spain: Balmes 22, 08007 BARCELONA, Tel. +34 93 301 6312, Fax. +34 93 301 4107

Sweden: Kottbygatan 7, Akalla, S-16485 STOCKHOLM, Tel. +46 8 5985 2000, Fax. +46 8 5985 2745

Switzerland: Allmendstrasse 140, CH-8027 ZÜRICH, Tel. +41 1 488 2741 Fax. +41 1 488 3263

Taiwan: Philips Semiconductors, 6F, No. 96, Chien Kuo N. Rd., Sec. 1, TAIPEI, Taiwan Tel. +886 2 2134 2886, Fax. +886 2 2134 2874

Thailand: PHILIPS ELECTRONICS (THAILAND) Ltd., 209/2 Sanpavuth-Bangna Road Prakanong, BANGKOK 10260, Tel. +66 2 745 4090, Fax. +66 2 398 0793

Turkey: Yukari Dudullu, Org. San. Blg., 2.Cad. Nr. 28 81260 Umraniye, ISTANBUL, Tel. +90 216 522 1500, Fax. +90 216 522 1813

Ukraine: PHILIPS UKRAINE, 4 Patrice Lumumba str., Building B, Floor 7, 252042 KIEV, Tel. +380 44 264 2776, Fax. +380 44 268 0461

United Kingdom: Philips Semiconductors Ltd., 276 Bath Road, Hayes, MIDDLESEX UB3 5BX, Tel. +44 208 730 5000, Fax. +44 208 754 8421

United States: 811 East Arques Avenue, SUNNYVALE, CA 94088-3409, Tel. +1 800 234 7381, Fax. +1 800 943 0087

Uruguay: see South America

Vietnam: see Singapore

Yugoslavia: PHILIPS, Trg N. Pasica 5/v, 11000 BEOGRAD, Tel. +381 11 3341 299, Fax.+381 11 3342 553

For all other countries apply to: Philips Semiconductors, International Marketing & Sales Communications, Building BE-p, P.O. Box 218, 5600 MD EINDHOVEN, The Netherlands, Fax. +31 40 27 24825

Internet: http://www.semiconductors.philips.com

© Philips Electronics N.V. 2000 SCA69

All rights are reserved. Reproduction in whole or in part is prohibited without the prior written consent of the copyright owner.

The information presented in this document does not form part of any quotation or contract, is believed to be accurate and reliable and may be changed without notice. No liability will be accepted by the publisher for any consequence of its use. Publication thereof does not convey nor imply any license under patent- or other industrial or intellectual property rights.

Printed in The Netherlands 613516/04/pp16 Date of release: 2000 May 30 Document order number: 9397 750 07062

Let's make things better.

Philips Semiconductors

PHILIPS

Circuit for CSC Current Sensing

Vsense = Iload*(R2/R1)*R4

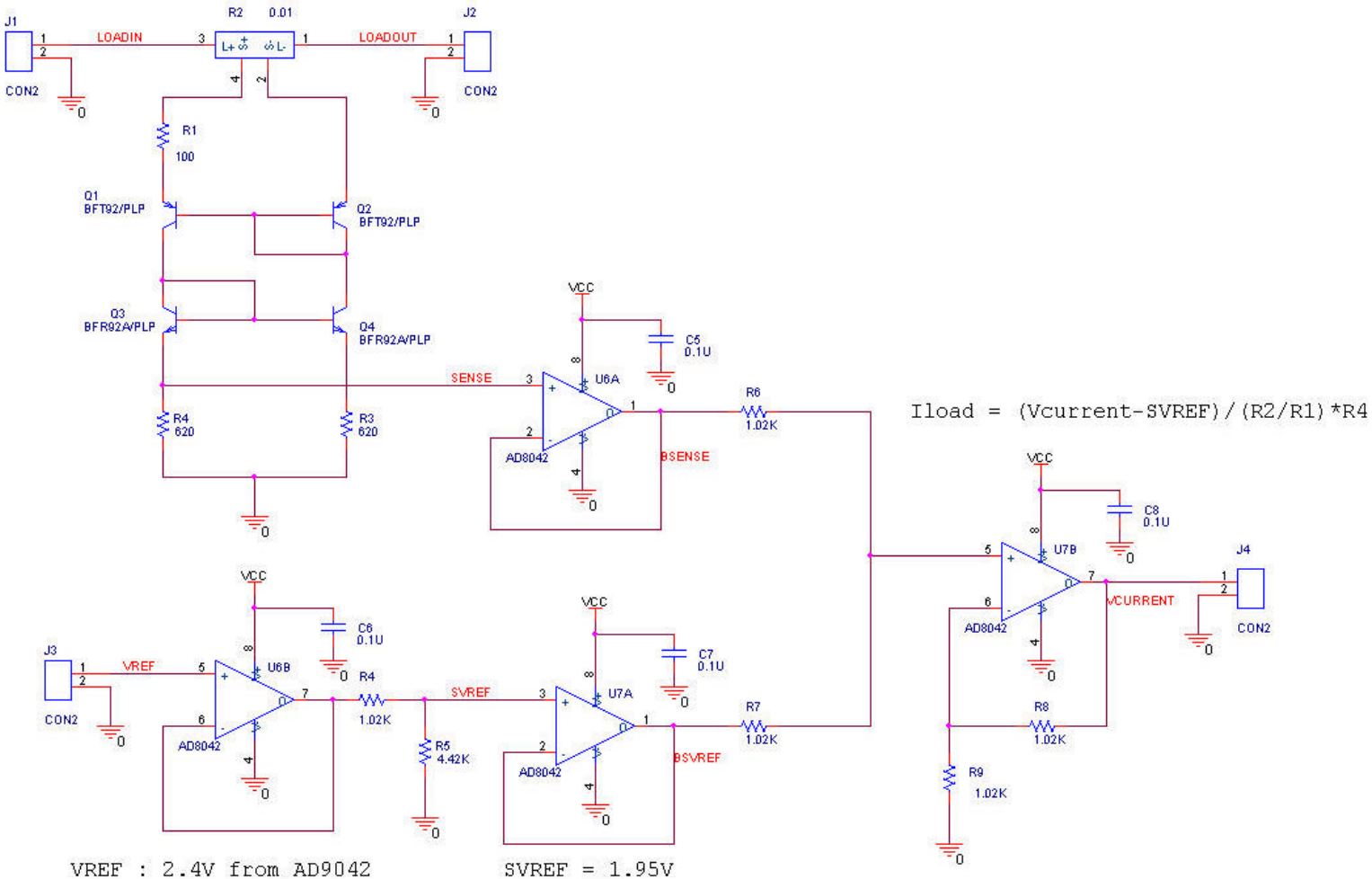

Iload = (Vcurrent-SVREF)/(R2/R1)*R4

VREF : 2.4V from AD9042

SVREF = 1.95V

Principle of Operation

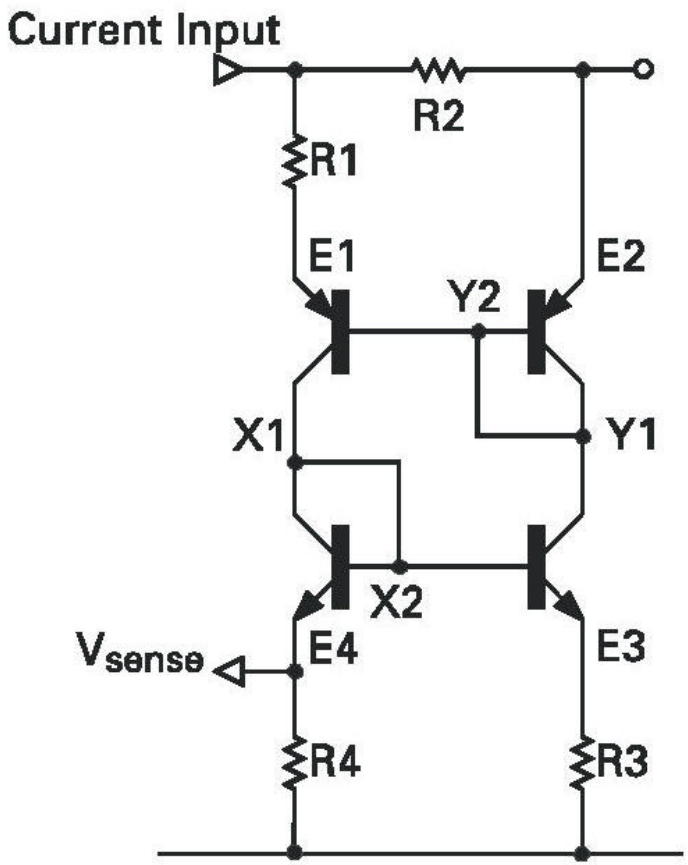

$$V_{BE_Q1} = V_{BE_Q2}$$

$$\text{Where } V_{BE_Q2} = I_{LOAD} \bullet R_2$$

$$I_{R1} = \frac{V_{BE_Q2}}{R_1} = I_{LOAD} \bullet \frac{R_2}{R_1}$$

$$V_{SENSE} = I_{R1} \bullet R_4 = I_{LOAD} \bullet \frac{R_2}{R_1} \bullet R_4$$

Vsense

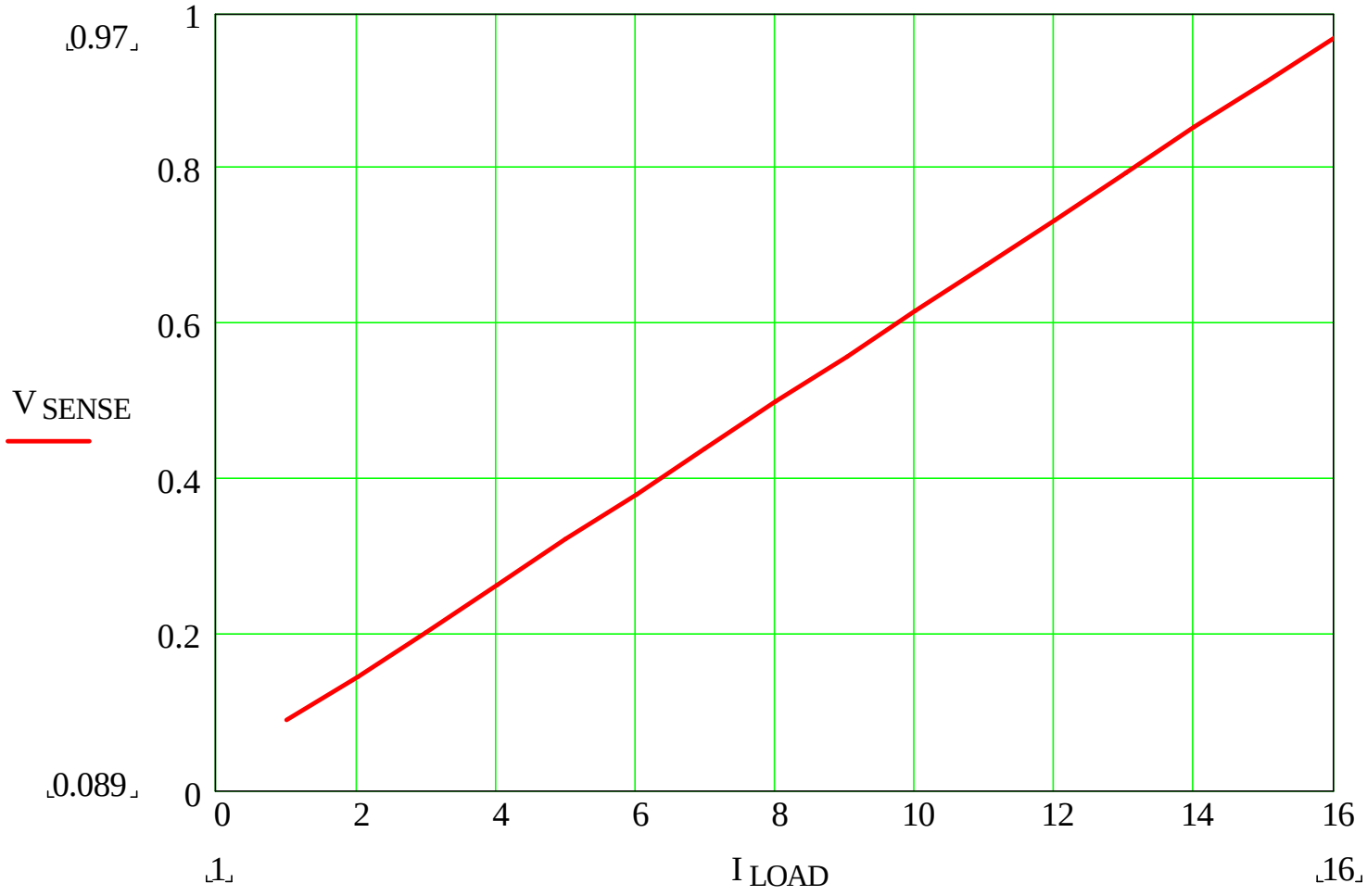

Vcurrent

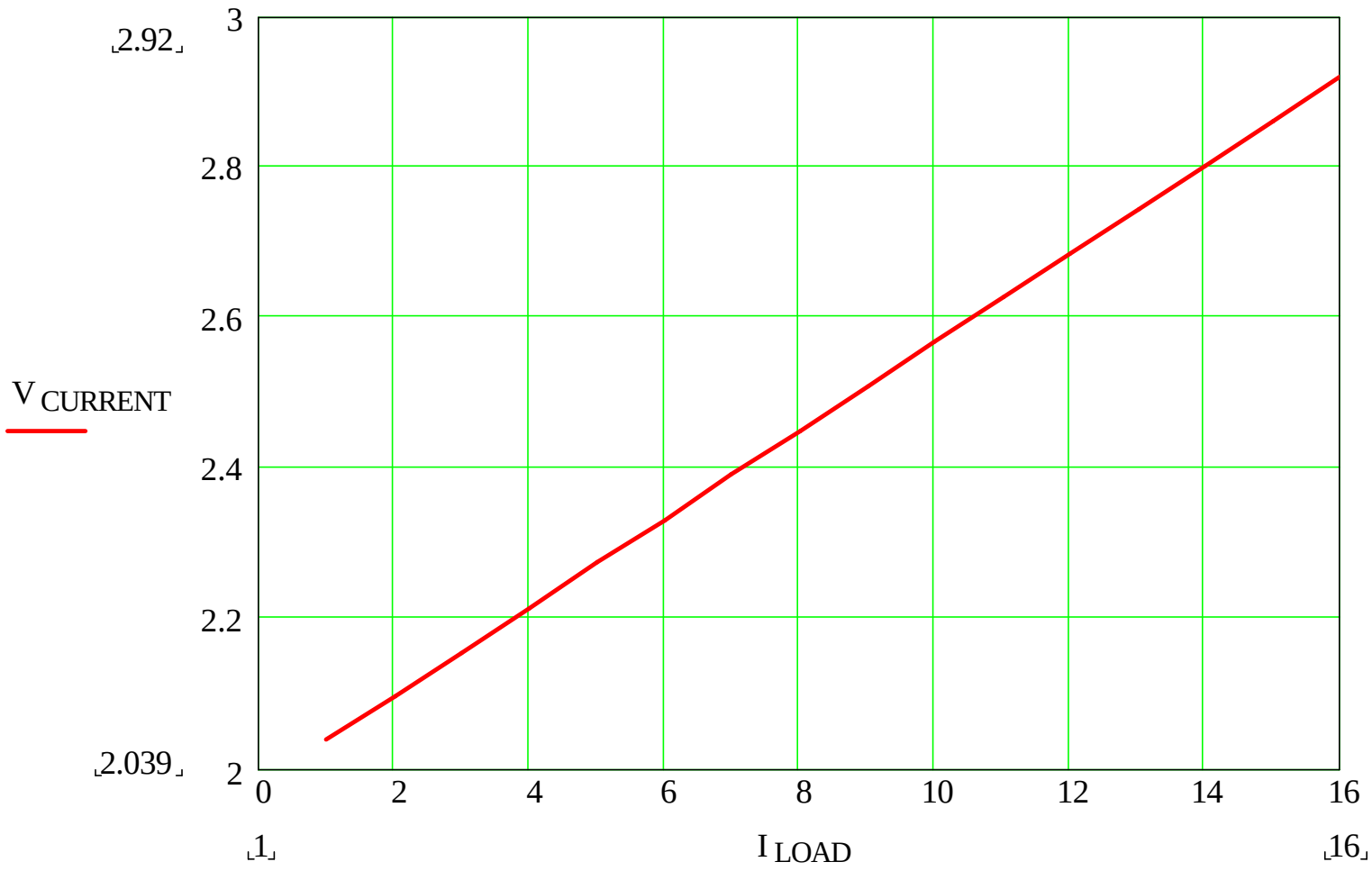

Imeasure

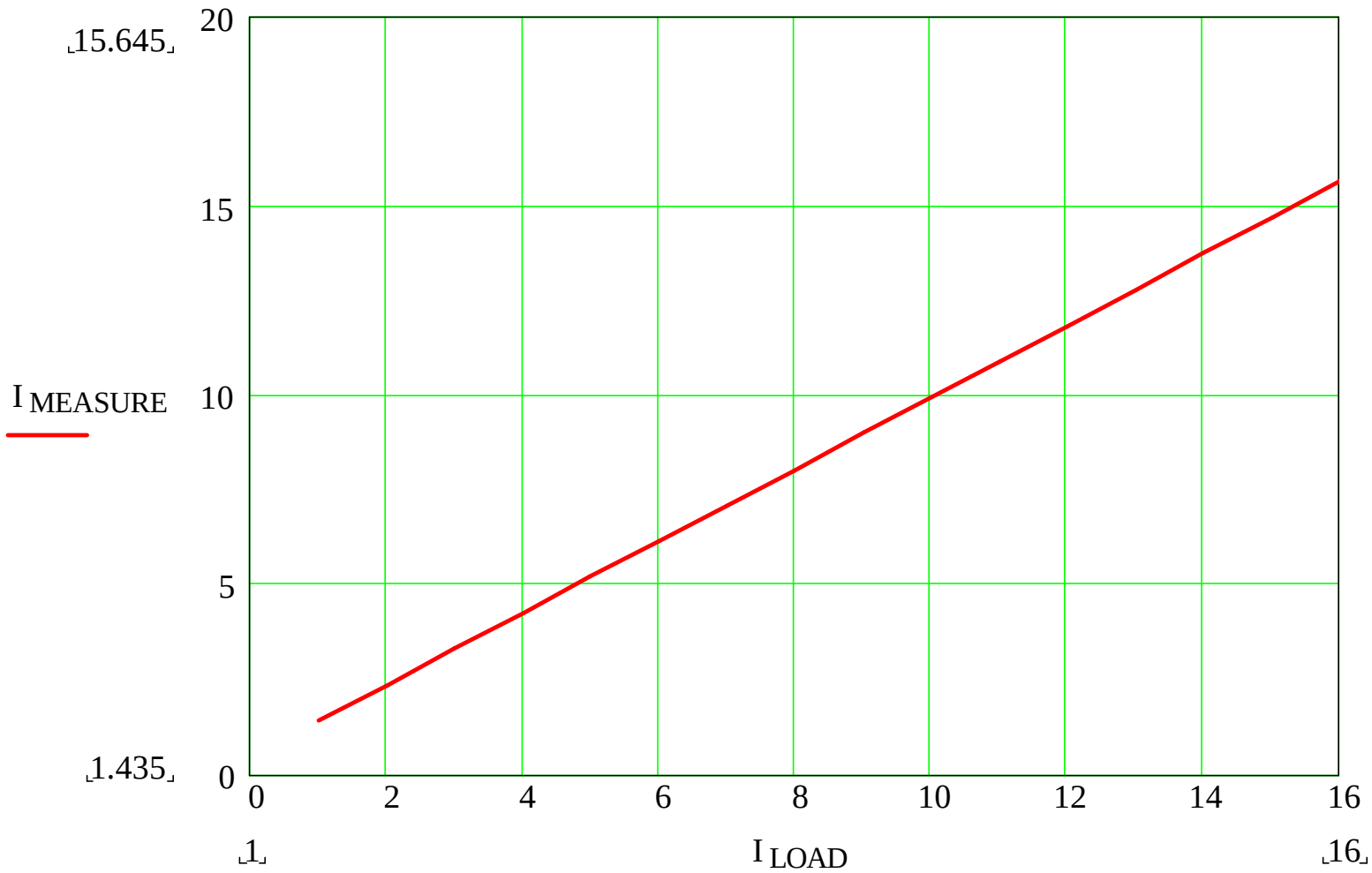

Error

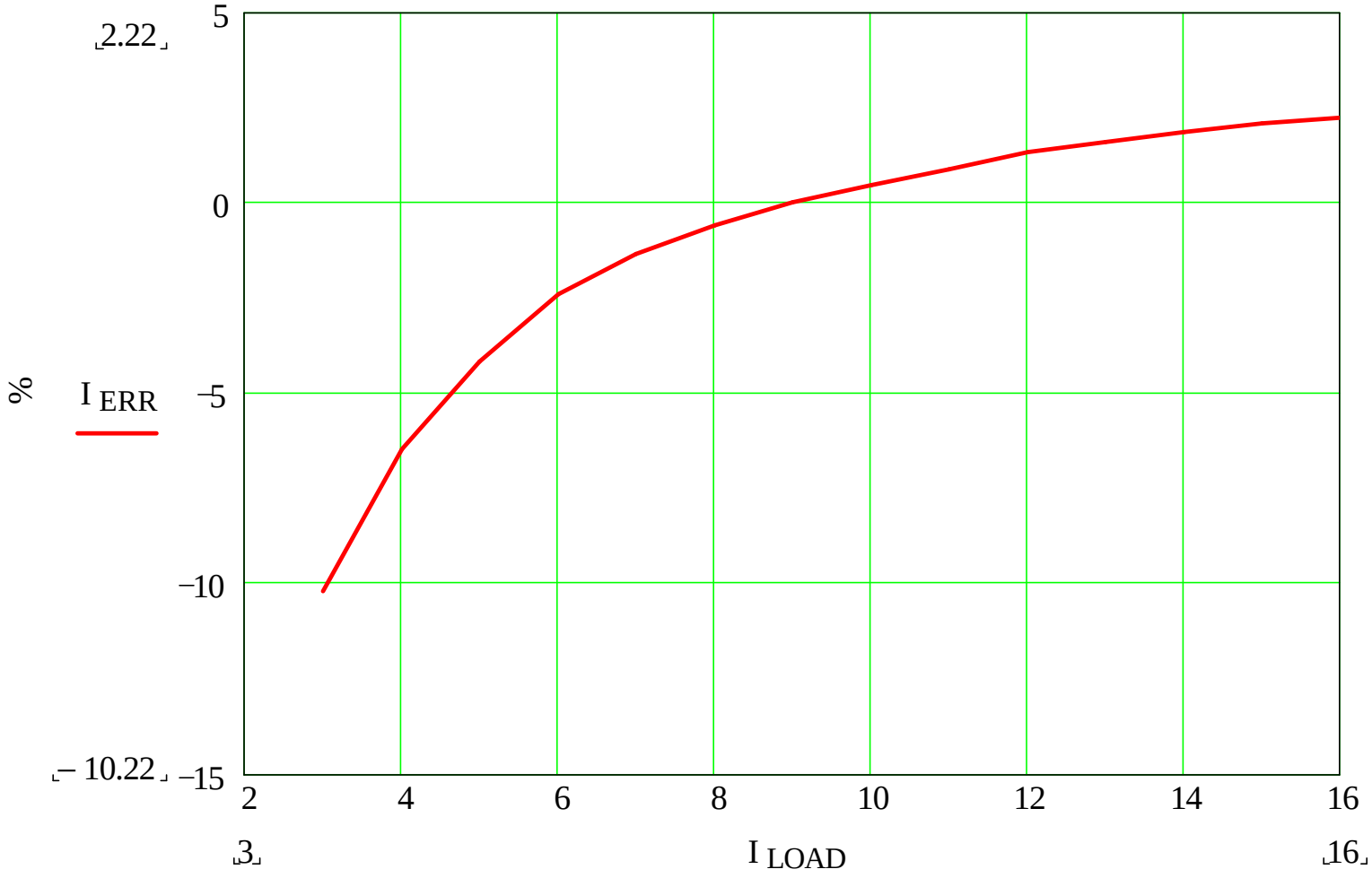

Location of Current Sensing Board

Current Sense Board

ASM1 Boards

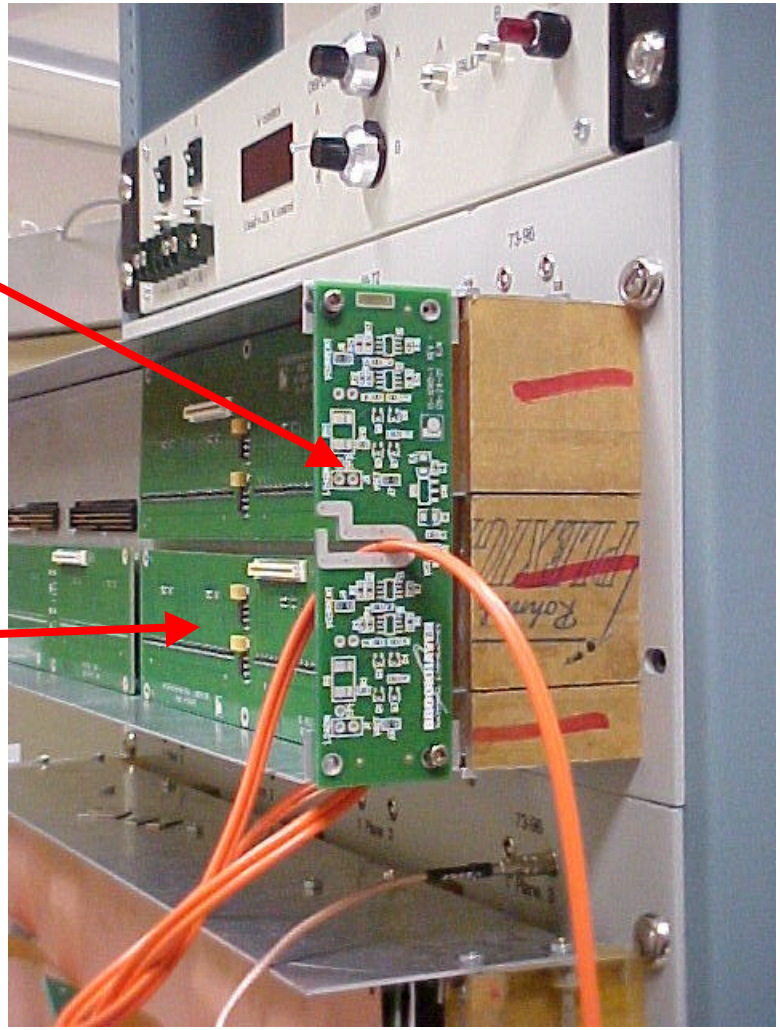

BROOKHAVEN NATIONAL LABORATORY

Current Sense Readout

SM-8 COMPLEMENTARY CURRENT MIRROR

DESCRIPTION

The ZDS1009 current mirror has been developed specifically for high side, current sense plus level translation applications and as such will find a broad applications base including battery charge management, DC motor control and over current monitoring functions. It is of particular interest for current sense applications for feedback purposes in fast battery chargers for Li-Ion cell based systems.

The device functions by sensing the voltage developed across an external (user defined) high side current sense resistor, and by an arrangement of current mirrors refer this sensed voltage, with or without multiplication, to a low side referenced signal. This signal can then be used, for example, to close the control loop to a controller IC, for a DC-DC converter providing charge to a battery.

FEATURES

- Excellent Temperature Tracking Characteristics
- Compact Cost Effective Solution
- Simplifies Circuit Implementation
- Broad application base from
  Single Cell Li-ion High Side Current sense chargers to
  Multi-cell Lead-Acid systems
- Only 4 Connections required

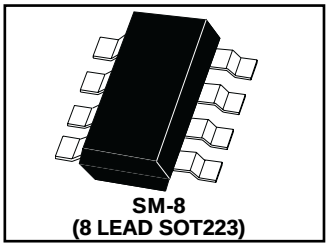

SCHEMATIC DIAGRAM

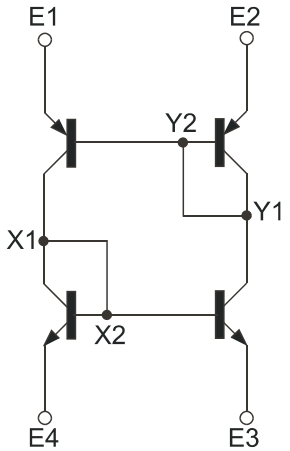

TYPICAL APPLICATION CIRCUIT

$$V_{sense} = IR_2 \frac{R_4}{R_1}$$

For balance R3=R4

eg

R2=100mΩ
R1=R3=R4=100Ω

V_{sense} sensitivity = 100mV/A

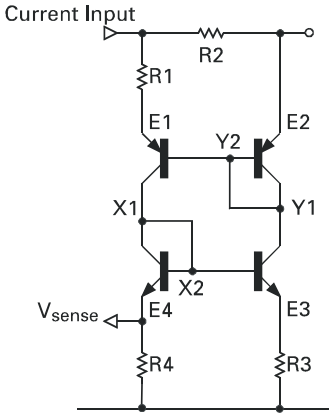

CONNECTION DIAGRAM

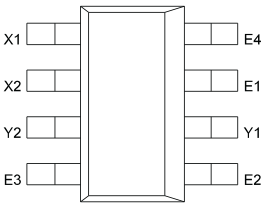

ABSOLUTE MAXIMUM RATINGS.

PARAMETER	SYMBOL	VALUE	UNIT
Maximum Operating Voltage	V_{y1-x1}	120	V
Maximum Voltage (E1-E2,E3-E4)	$V_{E-E'}$	10	V
Peak Pulse Current	I_M	4	A
Continuous Current (E1-E4,E2-E3)	I_C	1	A
Total Power Dissipation at T_{amb} = 25°C*	P_{tot}	2	W
Operating and Storage Temperature Range	T_j:T_{stg}	-55 to +150	°C

* The power which can be dissipated assuming the device is mounted in a typical manner on a PCB with copper equal to 2 inches square.

ELECTRICAL CHARACTERISTICS (at T_{amb}=25°C)

Parameter	Symbol	Min	Max	Unit	Conditions
Breakdown Voltage	BV_{Y1-X1}	120		V	I_{Y1}=100µA
Breakdown Voltage	BV_{X1-E1}	-30		V	I_{X1}=-10mA
Breakdown Voltage	BV_{Y1-E3}	30		V	I_{Y1}=10mA
Breakdown Voltage	BV_{E1-Y1}	-12		V	I_{E1}=-100µA
Breakdown Voltage	BV_{E2-Y1}	-6		V	I_{E2}=-100µA
Breakdown Voltage	BV_{E3-X1}	12		V	I_{E3}=100µA
Breakdown Voltage	BV_{E4-X1}	6		V	I_{E4}=100uA
Leakage	I_{Y1}		50	nA	V_{Y1-X1}=100V
Leakage	I_{X1}		-10	µA	V_{X1-E1}=-30V, V_{y1}=V_{E1}
Leakage	I_{Y1}		10	µA	V_{Y1-E3}=30V,V_{X1}=V_{E3}
Leakage	I_{E1}		-100	nA	V_{E1-Y1}=-8V
Leakage	I_{E2}		-100	nA	V_{E2-Y1}=-4V
Leakage	I_{E3}		100	nA	V_{E3-X1}=8V
Leakage	I_{E4}		100	nA	V_{E4-X1}=4V
Input Voltage	V_{Y1-E2}	-1.45	-1.65	V	I_{Y1}=-1A
Input Voltage	V_{Y1-E3}	1.45	1.75	V	I_{Y1}=1A,V_{X1}=V_{Y1}
Input Voltage	V_{X1-E1}	-1.45	-1.75	V	I_{X1}=-1A,V_{X1}=V_{Y1}
Input Voltage	V_{X1-E4}	1.45	1.65	V	I_{X1}=1A
Transfer Characteristic	V_{OUT}	0.99	1.01	V	See Fig 1.V_{CC}=5V R1=R3=R4=100Ω, V_{IN}=1V
Transfer Characteristic	V_{OUT}	1		mV	See Fig 1.V_{CC}=5V R1=R3=R4=100Ω, V_{IN}=5mV
Output Zero-Offset Voltage	V_{OFFSET}		4	mV	See Fig 2.V_{CC}=5V,R_2<1Ω R1=R3=R4=100Ω

TYPICAL CHARACTERISTICS

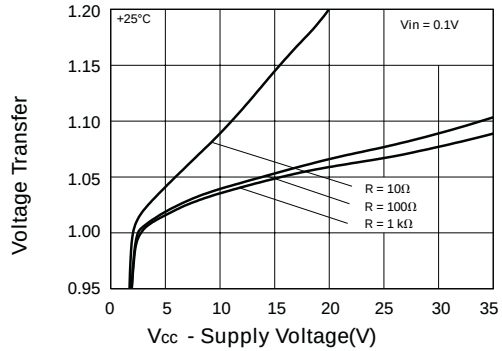

Voltage Transfer v Supply Voltage

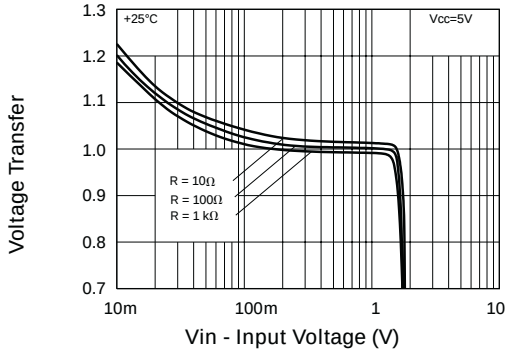

Voltage Transfer v Input Voltage

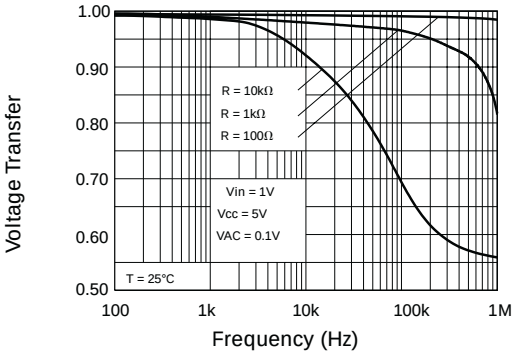

Voltage Transfer v Frequency Response

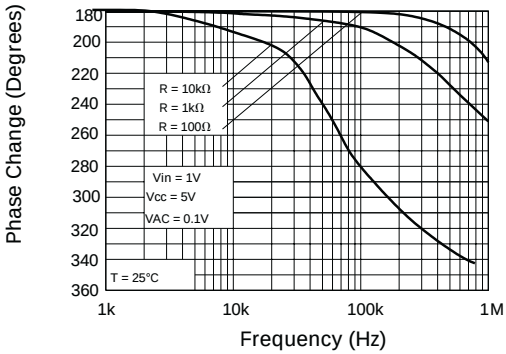

Phase Change v Frequency Response

TEST CIRCUITS

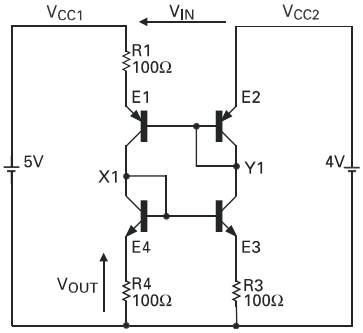

Figure 1
Transfer Characteristic Test Circuit

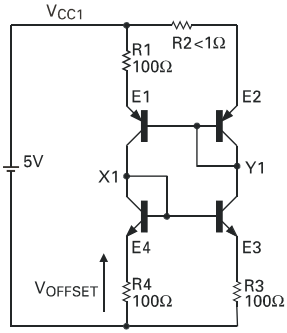

Figure 2
Output Zero-Offset Voltage Test Circuit

TYPICAL CHARACTERISTICS

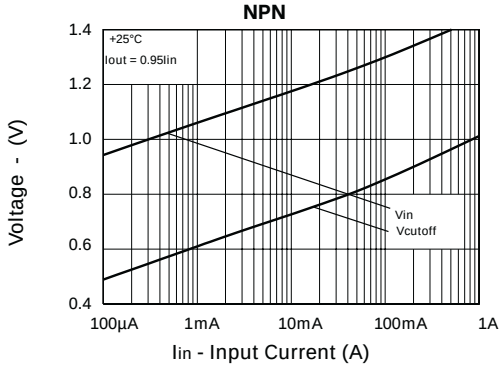

Input/Cutoff Voltage v Iin

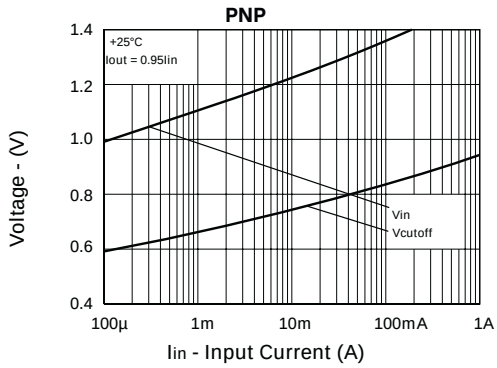

Input/Cutoff Voltage v Iin

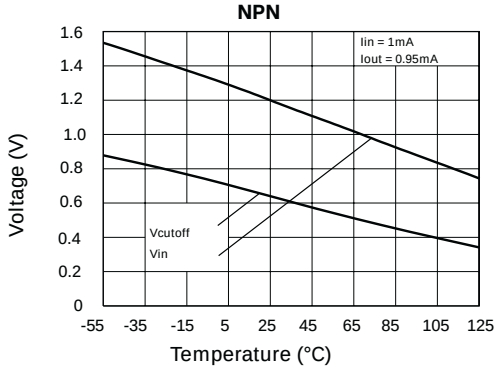

Input/Output Voltage v Temperature

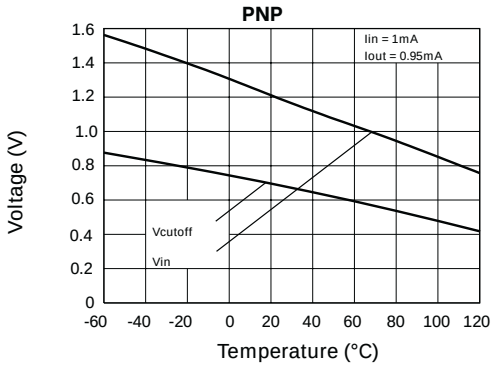

Input/Output Voltage v Temperature

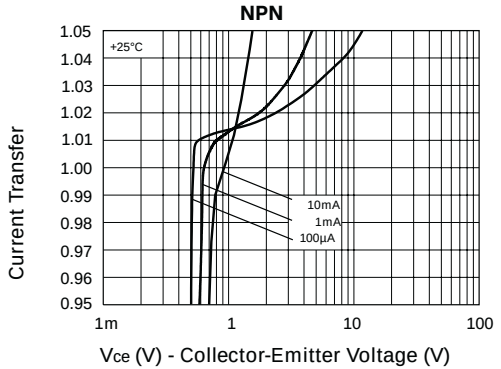

Current Transfer v Vce

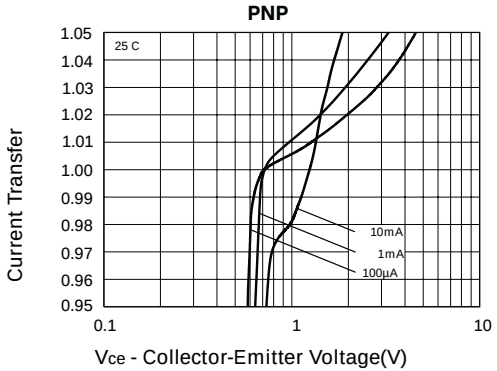

Current Transfer v Vce

PACKAGE DIMENSIONS

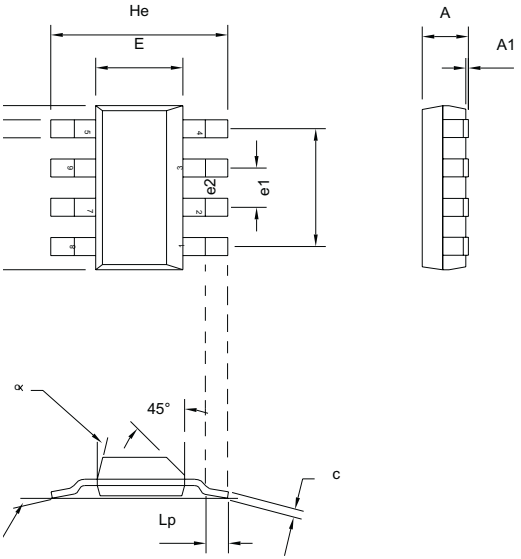

DIM	Millimetres			Inches		
	Min	Typ	Max	Min	Typ	Max
A	-	-	1.7	-	-	0.067
A1	0.02	-	0.1	0.0008	-	0.004
b	-	0.7	-	-	0.028	-
c	0.24	-	0.32	0.009	-	0.013
D	6.3	-	6.7	0.248	-	0.264
E	3.3	-	3.7	0.130	-	0.145
e1	-	4.59	-	-	0.180	-
e2	-	1.53	-	-	0.060	-
He	6.7	-	7.3	0.264	-	0.287
Lp	0.9	-	-	0.035	-	-
α	-	-	15°	-	-	15°
β	-	10°	-	-	10°	-

ORDERING INFORMATION

DEVICE	PARTMARKING
ZDS1009	S1009

Zetex plc.
Fields New Road, Chadderton, Oldham, OL9 8NP, United Kingdom.
Telephone: (44)161 622 4422 (Sales), (44)161 622 4444 (General Enquiries)
Fax: (44)161 622 4420

Zetex GmbH
Streitfeldstraße 19
D-81673 München
Germany
Telefon: (49) 89 45 49 49 0
Fax: (49) 89 45 49 49 49

Zetex Inc.
47 Mall Drive, Unit 4
Commack NY 11725
USA
Telephone: (631) 543-7100
Fax: (631) 864-7630

Zetex (Asia) Ltd.
3510 Metroplaza, Tower 2
Hing Fong Road,
Kwai Fong, Hong Kong
Telephone:(852) 26100 611
Fax: (852) 24250 494

These are supported by
agents and distributors in
major countries world-wide
© Zetex plc 2000

Internethttp://www.zetex.com

This publication is issued to provide outline information only which (unless agreed by the Company in writing) may not be used, applied or reproduced for any purpose or form part of any order or contract or be regarded as a representation relating to the products or services concerned. The Company reserves the right to alter without notice the specification, design, price or conditions of supply of any product or service.